TOWN OF SALEM

UTILITY DISTRICT

KENOSHA COUNTY, WISCONSIN

STANDARD SPECIFICATIONS FOR

SANITARY SEWER AND WATER MAIN IMPROVEMENTS

FEBRUARY 2008

Town of Salem
Utility District
9814 Antioch Road, P.O. Box 446
Salem, Wisconsin 53168
(262) 843-2753

SPECIFICATIONS

Page

SECTION 1 GENERAL CONSTRUCTION INFORMATION AND REQUIREMENTS 1
1.01 Location and Scope of Work 1
1.02 Definitions 1
1.03 Access to the Site 4
1.04 Traffic Control 4
1.05 Contractor's Plant and Equipment 5
1.06 Contractor's Utilities 5
1.07 Surveys and Soils Data 6
1.08 Lands by the Developer 7
1.09 Lands by the Contractor 7
1.10 Site Drainage and Dust Abatement 7
1.11 Safety and Health Standards and Accident Prevention 7
1.12 Contractor's Personnel Protection 8
1.13 Information Relating to the Existing Facilities 8
1.14 Relationship with Existing Facilities 9
1.15 Protection of Existing Installations 9
1.16 Notices 10
1.17 No Bypassing During Construction 10
1.18 Temporary Flow Stoppages and Maintenance of Flow 10
1.19 Removal of Existing Facilities 11
1.20 Preconstruction Photographs and Video Tape 11
1.21 Shipping and Protection of Material and Equipment 12
1.22 Construction Schedule 12
1.23 Cleaning Up 12
1.24 As-Built Drawings 13
1.25 Permits 13

SECTION 2 SITEWORK 14
2.01 Site Preparation 14
2.02 Erosion Control 16
2.03 Trenching 26
2.04 Boring and Jacking 34
2.05 Tracer Wire 38
2.06 Site Restoration 41
2.07 Restoration of Asphalt Roadway Pavement 44
2.08 Restoration of Concrete Pavement and Appurtenances 46
2.09 Access Pad 49
2.10 Seeding 51

Page

SECTION 3 SANITARY SEWER 53
3.01 General Requirements for Gravity and Pressure Sewer Construction 53
3.02 Polyvinyl Chloride (PVC) Sewer Pipe and Fittings 56
3.03 Polyvinyl Chloride (PVC) Pressure Pipe and Fittings for Gravity Sewers 58
3.04 Precast Reinforced Concrete Manholes 60
3.05 Polyvinyl Chloride (PVC) Sewer Lateral Pipe and Fittings 66
3.06 Gravity Sewer Deflection Testing 69
3.07 Gravity Sewer Leakage Testing 70
3.08 Gravity Sewer Televising 73
3.09 Polyvinyl Chloride (PVC) Pressure Sewer Pipe and Fittings 76
3.10 Pressure Sewer Pipeline Testing 78

SECTION 4 WATER MAIN 80
4.01 General Requirements for Water Main Construction 80
4.02 Polyvinyl Chloride (PVC) Water Main Pipe and Fittings 84
4.03 Resilient-Seated Gate Valves 88
4.04 Tapping Sleeves and Valves 90
4.05 Fire Hydrants 92
4.06 HDPE Water Services 94
4.07 Water Main Testing 97
4.08 Disinfection of Water Mains 99

Detail No.

STANDARD DETAILS

Typical Trench Section C-1
Horizontal Separation Laterals in Common Trench C-2
Vertical Separation Laterals in Common Trench C-3
Casing Installation C-4
Tracer Wire Access Riser C-5
Type "T" Roadway Restoration C-6
Access Pad C-7
Sanitary Sewer Bedding S-1
Concrete Encasement S-2
Typical Manhole Base Plan S-3
Standard Manhole S-4
Low Headroom Manhole S-5
48" to 26" Reducing Slab S-6
Anchored Manhole Frame and Cover S-7
Manhole Castings S-8
Standard Drop Manhole 8" to 15" (Inclusive) S-9
Manhole Connections - 1 ..... S-10
Manhole Connections - 2 ..... S-11
Manhole Backfill S-12
Transition Coupling S-13
Standard Sewer Lateral - SSL S-14
Deep Sewer Lateral - DSL S-15
Sewer Lateral Saddle Connection S-16
Sewer Lateral Cleanout S-17
Pressure Sewer Bedding S-18
Pressure Sewer Discharge Manhole Connection S-19
Pressure Sewer Lateral S-20
Pressure Sewer Flushing Connection S-21
Water Main Bedding W-1
Thrust Blocking W-2
Resilient Seated Gate Valve and Box Setting W-3
Standard Fire Hydrant W-4
Air Release Assembly W-5
Water Service W-6

SPECIFICATIONS

SECTION 1

GENERAL CONSTRUCTION INFORMATION AND REQUIREMENTS

1.01 Location and Scope of Work

The work covered under this project will be performed in the Town of Salem, Kenosha County, Wisconsin. In general, the work consists of providing all labor, materials, tools, and equipment necessary for construction of a sanitary sewer and water main improvements. The sanitary sewer work includes a sanitary sewer pipeline with associated manholes, sewer laterals, and fittings. The water main work includes water main pipeline with associated fire hydrants, valves, water services, and fittings.

1.02 Definitions

(1) Acceptance

"Acceptance" means the formal action of the District in determining that the Contractor's work has been completed in accordance with the standard specifications and in notifying the Contractor in writing of the acceptability of the work.

(2) Contractor

"Contractor", "The Contractor", "Each Contractor", "All Contractors", whenever and in whatever manner used means each and every contractor who has entered into a contract with the Developer for performance of the work.

(3) Contractor's Plant and Equipment

"Contractor's plant and equipment" means everything, except labor, brought onto the site by the Contractor in order to carry out the work, but not be incorporated in the work.

(4) Day

"Day" means a calendar day of 24 hours.

(5) Developer

"Developer", as described under this standard specification, shall be that set forth as the Developer in the Developer's Agreement with the Town, or any person or persons to whom the power belonging to the Developer shall be duly delegated.

(6) Developer's Engineer

"Developer's Engineer", as described under this standard specification, shall be the person designated in writing by the Developer to the District to act on the Developer's behalf on engineering matters relating to this standard specification.

(7) District

"District", "Utility District", as described under this standard specification, shall be that set forth as the Town of Salem Utility District, or any person or persons to whom the power belonging to the District shall be duly delegated.

(8) District's Engineer

"District's Engineer", "Engineer", as described under this standard specification, shall be the person designated in writing by the District to the Developer to act on the District's behalf on engineering matters relating to this standard specification. If designated by the District, the functions of the Engineer may be performed by the District's Representative.

(9) District's Representative

"District's Representative", as described under this standard specification, shall be the person designated in writing by the District to act as its agent on all matters relating to this standard specification. Both the Contractor and the Engineer look to the District's Representative as the individual authorized to act on behalf of the District under the terms of this standard specification.

(10) Equipment

“Equipment" means the mechanical, electrical, instrumentation, or other device with one or more moving parts, or devices requiring an electrical, pneumatic, electronic, or hydraulic connection.

(11) Furnish

"Furnish" means to deliver to the job site or other specified location any item, equipment, or material.

(12) Herein

"Herein", "hereinafter" and words of similar import shall refer to the standard specifications.

(13) Install

"Install", wherever and in whatever manner used, shall mean the installation complete in place of an item of equipment or material.

(14) Masculine Gender

Masculine gender words include the feminine.

(15) May

"May", wherever and in whatever manner used, is permissive.

(16) Person

"Person" includes firms, companies, and corporations.

(17) Project

"Project" means the undertaking to be performed under the provisions of the standard specification.

(18) Project Drawings

"Project drawings", "drawings", "standard details", or "details" means and includes (a) all drawings which have been prepared on behalf of the District and which are included in the standard details and all modifying drawings issued by revised thereto; (b) all drawings which have been prepared on behalf of the Developer; (c) all drawings submitted pursuant to the terms of the standard specifications by the Contractor and by the Contractor to the District during the progress of the work when accepted by the Engineer; and (d) all drawings submitted by the Engineer to the Contractor during the progress of the work.

(19) Provide

"Provide", wherever and in whatever manner used, shall be understood to mean to provide any item, equipment, or material complete in place, that is, furnish and install.

(20) Required

"Designated", "permitted", "required", "accepted", and words of like import, wherever and in whatever manner used, with or without references to the Engineer, means as directed, designated, permitted, required, and accepted by the Engineer.

(21) Shall or Will

"Shall" or "will", whenever used to stipulate anything, means shall or will be done or be performed by either the Developer, the Contractor, or the District and means that the Developer, the Contractor, or the District has thereby entered into a covenant with the other party to do or perform the same.

(22) Shown

"Shown", "indicated", "detailed", and words of like import, wherever and in whatever manner used, with or without reference to the drawings, means shown, indicated or detailed on the drawings.

(23) Singular

Singular words include the plural.

(24) Specified

"Specified", "described", or "noted", wherever and in whatever manner used, means as specified, described or noted in the standard specifications.

(25) Standard Specifications

"Standard Specifications" or "Specifications" include Section 1, Section 2, Section 3, and Section 4 Specifications and Standard Details in the "Town of Salem Utility District, Kenosha County, Wisconsin, Standard Specifications for Sanitary Sewer and Water Main Improvements", and shall further include all supplemental agreements amending or extending the work.

(26) Submitted

"Submitted", wherever and in whatever manner used, means submitted to the Engineer for his acceptance.

(27) Sufficient

"Sufficient", "necessary", or "proper", "acceptable", "satisfactory", "desirable", and words of like import, wherever and whatever manner used, with or without reference to the Engineer, means sufficient, necessary, proper, acceptable, satisfactory and desirable in the judgment of the Engineer.

(28) Town

"Town", as described under this standard specification, shall be the Town of Salem.

(29) The Work

"The work" or "work", means and includes anything and everything to be done for the setting out, execution and completion and fulfillment of the standard specifications for the project to the satisfaction of the District.

1.03 Access to the Site

Access to the sanitary sewer pipeline and water main pipeline routes is from the paved roadways in the public right-of-way. The Contractor shall maintain the access roads by whatever means are necessary to provide free and easy access to the site at all times. Upon completion of the work, the Contractor shall perform whatever repair work is necessary to restore the access road to its original condition.

1.04 Traffic Control

The Contractor shall submit a written traffic control plan to the Town for review and approval not less than ten days prior to starting work. A copy of the approved plan shall be submitted to the engineer before starting work. The Contractor shall notify and obtain a permit(s) from the public authority having jurisdiction before working in any public roadway. The Contractor shall notify the District of his intention to close a particular roadway three days in advance of the proposed closing. Detour signs when required, shall be posted and maintained on adjacent road intersections. Proper barricades, signs, flags, lights, and flaggers shall be provided and maintained where construction interferes with normal traffic use of the street or road. All barricades placed within a roadway that are present at night or when visibility is poor shall be equipped with operable flashing amber lights. All marking and signing provided for traffic control purposes shall conform to the standards and specifications of the current issue of the Wisconsin Manual on Uniform Traffic Control Devices.

The Contractor shall conduct his work in such manner as not to unduly or unnecessarily restrict or impede normal traffic through the streets, roads, or highways. The Contractor shall conduct his work in such a manner that access for mail delivery, school buses, and emergency vehicles is maintained at all times. Insofar as it is practicable, the Contractor shall not locate excavated material and spoil banks in such manner as to obstruct traffic. The Contractor shall keep the traveled way of all streets, roads, and alleys clear and unobstructed insofar as is possible. The Contractor shall not use streets, roads, or alleys for the storage of construction materials, equipment supplies, or excavated earth, except when and where necessary.

If required, the Contractor shall, at his own expense, construct bridges or other temporary crossing structures over trenches so as not to unduly restrict traffic. Such structures shall be of adequate strength and proper construction and shall be maintained by the Contractor in such manner as not to constitute an undue traffic hazard. Private driveways shall not be closed, except when and where necessary, and then only upon due advance notice to the Engineer and property owner and for the shortest practicable period of time, consistent with efficient and expeditious construction.

Streets, roads, or highways in which excavation has occurred shall be temporarily restored to receive traffic as soon as possible. Permission for the Contractor to close additional streets shall be denied if, in the opinion of the District or the Engineer, the restoration of streets where excavation has occurred has not progressed satisfactorily.

1.05 Contractor's Plant and Equipment

(1) Security

The Contractor shall at all times be responsible for the security of his plant and equipment. The District will not take any responsibility for missing or damaged equipment, tools, or personal belongings. The Contractor shall at all times provide such permanent and temporary fencing or barricades as may be necessary to restrict unauthorized entry to the construction site.

(2) Office

During the performance of the project, the Contractor shall maintain a suitable office at the site of the work which shall be the headquarters of the Contractor's representative.

(3) Parking Facilities

The Contractor shall provide adequate all-weather access and parking facilities for the automobiles used by his construction employees and his own vehicles.

(4) Construction Noise

The Contractor shall take all necessary precautions to minimize construction noise. All plant and equipment shall be fitted with suitable noise reduction devices such as mufflers, inlet and exhaust silencers, and engine covers which shall be maintained in good working order.

The Engineer shall decide on the adequacy of provision and maintenance of noise reduction equipment. When so instructed in writing by the Engineer, the Contractor shall immediately withdraw any item of plant or equipment from service and carry out all necessary additions, replacements, or repairs to the noise reduction equipment to the satisfaction of the Engineer.

1.06 Contractor's Utilities

(1) Power

The Contractor shall provide for and in behalf of his work for this project all electrical power necessary for construction. All portable power generating equipment shall be provided with a standby unit.

(2) Water

The Contractor shall provide for and in behalf of his work for this project all water necessary for use in construction or testing.

(3) Sanitary Facilities

The Contractor shall make arrangements for use of adequate toilet facilities at the site of work. Such facilities shall be subject to the acceptance of the Engineer as to location and type. The Contractor shall maintain the toilet facilities in a neat, clean, and sanitary condition from the beginning of the work until completion and shall then remove the facilities and disinfect the premises.

(4) Temporary Heating

The Contractor shall provide temporary heating, covering, and enclosures as necessary to protect his work and material against damage by dampness and cold and to facilitate completion of the work. The Contractor shall supply all the fuel, equipment, and materials required for his temporary heating.

1.07 Surveys and Soils Data

(1) General

Unless otherwise specified, the Developer's Engineer will establish reference bench marks and base lines adjacent to the work. From the information thus provided, the Contractor shall develop and make such additional surveys as are needed for construction.

The Developer's Engineer will provide the District, the Engineer, and the Contractor with a copy of the field notes used to layout the project. The Contractor shall review the notes and compare the information on the notes with the information on the drawings. The Contractor shall bring any discrepancies or differences to the attention of the Engineer and Developer's Engineer for clarification before starting work. The Developer's Engineer shall issue a written clarification to resolve the discrepancy or difference. Any work performed before the Developer's Engineer issues a written clarification will be performed at the Contractor's risk.

Bench marks, base lines, property boundaries, line and grade hubs, and other reference and construction points as originally established by the Developer's Engineer or Engineer shall thereafter be maintained by the Contractor who shall be responsible for keeping their accuracy and who shall pay to the Developer's Engineer or Engineer all costs of reestablishing them if they are disturbed. The Contractor shall notify the Developer's Engineer and Engineer in writing at least ten days in advance of the time he will commence work on any parts of the construction requiring surveys to be furnished by the Developer's Engineer.

The Contractor shall provide reasonable and necessary opportunities and facilities for setting points and making measurements during construction. He shall not proceed until he has made request to the Developer's Engineer for and has received from such points as may be necessary as the work progresses. The construction work shall be done in strict conformance with such points.

The Contractor shall provide reasonable and necessary opportunities and facilities for sampling and testing soils and materials during construction. All field and laboratory test data resulting from testing for groundwater, soil, or geologic conditions performed by the Contractor shall be furnished to the Engineer as soon as available.

(2) Sanitary Sewer Survey

The Developer's Engineer shall provide a sanitary sewer survey prior to the start of sewer construction. The sanitary sewer manholes and other appurtenances shall be located on center line and with an offset hub. The sanitary sewer pipeline shall be located on center line and with offset hubs from each manhole at 25 feet, 50 feet, 100 feet, 200 feet, 300 feet, and next manhole. Offset hubs shall be located a minimum of 20 feet from the centerline of the sanitary sewer pipeline and marked with the hub elevation and cut or fill to the invert of the sanitary sewer pipeline. The direction of the offset hubs shall be coordinated with the Contractor to minimize conflict during construction. Sanitary sewer laterals shall be located on center line of the sanitary sewer pipeline and at the property line or at the edge of the easement.

(3) Water Main Survey

The Developer's Engineer shall provide a water main survey prior to the start of water main construction. The water main pipeline shall be located on center line and with offset hubs at a maximum of 100-foot intervals. Water main fittings, valves, and other appurtenances shall be located on center line and with offset hubs. Fire hydrants shall be located on the center line of the fire hydrant main and with offset hubs. Offset hubs shall be located a minimum of 20 feet from the center line of the water main pipeline and marked with the hub elevation and cut or fill to the invert of the water main pipeline. The direction of the offset hubs shall be coordinated with the Contractor to minimize conflicts during construction. Water services shall be located on center line of the water main pipeline and at the property line or at the edge of the easement.

1.08 Lands by the Developer

The Developer will provide the lands upon which the work for this project is to be constructed, together with the right of access to such lands. The Contractor shall not unreasonably encumber the premises with his plant or materials.

1.09 Lands by the Contractor

The Contractor shall provide with no liability to the Developer or the District any additional land and access thereto not shown or described that may be required for temporary construction facilities or storage of materials. The Contractor shall construct all access roads, detour roads, or other temporary works as required by his operations. The Contractor shall confine his equipment, storage of materials and operation of his workmen to those areas shown and described and such additional areas as he may provide.

1.10 Site Drainage and Dust Abatement

The Contractor shall, at all times, see that affected work site areas shall be kept drained and free of ground water and surface water. The Contractor shall dispose of the water so as not to cause injury to public or private property or to cause a nuisance or menace to the public. Additionally, the Contractor shall prevent excessive dust; and he shall, at his own expense, provide adequate dust control measures acceptable to the Engineer.

1.11 Safety and Health Standards and Accident Prevention

The Contractor shall comply with the safety standard of applicable building and construction laws and codes, including the "Manual of Accident Prevention in Construction" published by the Associated General Contractors of America, and United States Department of Labor (Occupational Safety and Health Administration) Safety and Health Regulations for Construction. The Contractor shall be solely and

completely responsible for working conditions on or near the job site, including safety of all persons and property during performance of work. These requirements shall apply continuously and shall not be limited to normal working hours.

The Contractor shall maintain at a well-known place at the job site all articles necessary for giving first-aid to the injured and, before employees shall be permitted to work at the job site, the Contractor shall make standing arrangements for the immediate removal to a hospital or to a doctor's care of persons, including employees, who may be injured on the job site.

The duty of the Engineer to review the Contractor's construction performance does not include review of the adequacy of the Contractor's safety measures. Such review is a responsibility of the Department of Labor Occupational Safety and Health Administration.

1.12 Contractor's Personnel Protection

The Contractor is warned that the Salem Utility District Sanitary Sewer System has been in operation for over 35 years, and that many portions of the system have been exposed to sewage and industrial wastes. Any workers involved in the sewer construction, therefore, may be exposed to disease-producing organisms. It is the Contractor's responsibility to urge his personnel to observe a strict regimen of proper hygienic precautions, including tetanus and typhoid inoculations. The District will assume no responsibility for sickness arising from conditions encountered during prosecution of the work.

Sewers, manholes, wet wells, and other areas that could be exposed to flammable or explosive fumes and gases are considered hazardous to open flame, sparks, or unventilated occupancy because of the danger of solvents, gasoline, and other hazardous material entering the sewer system. The Contractor shall be aware of these dangers and shall take the necessary measures to assure his personnel observe proper safety precautions when working in these areas. All Contractor's personnel working within these areas shall be made aware of the hazardous nature of these materials and of the safety precautions to be taken in case of an emergency.

1.13 Information Relating to the Existing Facilities

(1) General

The existing facilities of the Town of Salem Utility District were constructed during the past 35 years. Partial sets of the contract documents under which the existing facilities were constructed are available for inspection and viewing at the Salem Utility District office at 28733 Wilmot Road, Trevor, Wisconsin 53179. Because of the nature of the work and changes initiated by operating personnel, some adjustments may be required in the field to meet existing conditions.

(2) Unknown Conflicts

When an underground structure, not shown or indicated, occupies the alignment of the proposed pipe or structure, the Contractor shall give immediate notice to the Engineer, Developer, and the owner of the structure of such conflict. The Developer's Engineer shall submit a plan to remove, relocate, or alter the structure, or alter the plan or profile of the proposed structure as required to eliminate the conflict.

(3) Interferences and Known Conflicts

The Contractor shall include in his bid to the Developer the cost of work associated with conflicts that are shown, indicated, or visible, and the cost of work associated with underground structures, whether shown or not that may interfere with the work but do not physically conflict with the proposed pipe or structure but do not require additional materials.

(4) Relocations for the Contractor's Convenience

In the event that relocation of an existing structure or facility is to be made for the convenience of the Contractor rather than because of actual conflict with the proposed pipe or structure, the Contractor will first notify the Engineer, the Developer's Engineer, and the owner of the underground structure of his desire to temporarily relocate such structure or to discontinue the service therein; and receive from the owner of such underground structure written permission for such relocation or discontinuance of service. Replacement to original position and condition shall be made at no cost to the District. The owner of the structure shall have the right to do all the work in connection with said relocation, discontinuance and replacement, billing the Contractor for all costs of same, or, with the approval of the owner, the relocation, discontinuance or replacement may be made by or arranged for, by the Contractor at his own expense.

1.14 Relationship with Existing Facilities

The District's operating personnel will be responsible for operating existing and new facilities. The Contractor is advised that, unless otherwise indicated, the equipment presently installed must be available to the District's personnel at all times for use, routine maintenance, and repair. The Contractor, therefore, shall at all times take particular care to avoid needless confusion, clutter, and debris at the site of the work. At no time shall the Contractor's personnel, equipment, or material prevent the rapid access by the District's staff to any item of equipment and piping. If it is necessary in the course of operating the system to request the Contractor to move his equipment, materials, or any material included in the work, the Contractor shall do so promptly and place said equipment or material in an area which does not interfere with the system operation.

The Contractor is further cautioned against adjusting or operating any serviceable or functioning equipment or system without the written consent of the District. The Contractor shall notify the Engineer one week in advance of the time that is necessary to take out of service any existing equipment or pipeline.

1.15 Protection of Existing Installations

All surface structures and features, including pavements, trees and shrubs, adjacent to the construction easement, or right-of-way, and those within the construction easement, or right-of-way, which are not to be removed, shall be properly protected against all damage. The Contractor shall correct or replace, without delay any and all damage to existing surfaces, equipment, controls, or systems resulting from his operations.

All existing natural gas pipes, water pipes, electric, cable television, communication cables, telephone cables and conduits, sewers, drain tile, culverts, fire hydrants, and other surface or subsurface structures, either of a private or of a public ownership, which do not, in the opinion of the Engineer, require to be changed in location shall be carefully supported and protected from injury by the Contractor. All such work must be done by and at the expense of the Contractor and according to his own plans, subject to the review of the Engineer. The fact that the District or Developer may be under no legal obligation to provide for doing such work will be no excuse for the Contractor neglecting or refusing to perform the same.

In the event of damage or injury to any of these surfaces or subsurface structures, the Contractor will be required to make replacements or repairs to the satisfaction of the Engineer at no additional cost to the District or Developer.

1.16 Notices

(1) Notice to Utilities

The project area may contain sanitary sewers, water mains, cable television lines, communication cables, natural gas lines, storm drains, electric lines, and telephone lines. The Contractor shall schedule his work to prevent interruption of these services. Where an interruption is unavoidable, the Contractor shall give at least 7 days notice to the Engineer and the Utility and shall submit a program of work acceptable to both the Engineer and the owner of the facility.

The Contractor shall give notice in writing to all utilities that may be affected by the Contractor's operations at least three (3) working days before starting work. The Contractor shall not hinder or interfere with any person in the operation or protection of such work at any time. The notice in no way relieves the Contractor of his responsibility to preserve and protect the utilities, but it will inform the various owners of the Contractor's activities so that they may locate and mark their facilities for the convenience of the Contractor.

(2) Notice to Governmental Services

The Contractor shall give written notice to the Utility District, Town of Salem, U.S. Post Office, local school district, local fire department, and local ambulance service not less than three (3) days before starting work or obstructing traffic on any public road or street. The Contractor shall give written notice to the Kenosha County Highway Department and the Kenosha County Sheriff's Department not less than three (3) days before starting work or obstructing traffic on any county highway. The Contractor shall give written notice to the Wisconsin Department of Transportation (WDOT) and the Wisconsin State Patrol not less than three (3) days before starting work or obstructing traffic on any state highway or federal highway.

1.17 No Bypassing During Construction

Bypassing of untreated or partially treated wastewaters to surface waters or drainage courses will not be permitted during construction. The Contractor shall provide for the maintenance of the existing level of wastewater flow at all times during construction by means acceptable to the Engineer. In the event that an emergency condition causes or threatens to cause bypassing, the Contractor shall immediately notify the Department of Natural Resources, the Developer, the District, and the Engineer.

1.18 Temporary Flow Stoppages and Maintenance of Flow

In cases where the construction requires connections to live conduits, or the plugging of existing pipes to be abandoned, the Contractor shall make provisions for diverting flow from these areas and maintain operation at all times. All sewage flow interfering with construction and requiring diversion shall be diverted to sewers leading to the Wastewater Treatment Plant. Prior to commencing construction, the Contractor shall submit for the District's review detailed plans (including routing and connection) showing how he intends to handle and dispose of sanitary sewer wastes. By reviewing the plan, the District neither accepts any responsibility for the adequacy thereof nor for any damages to public or private property resulting therefrom, such responsibilities remain with the Contractor. One hundred percent standby equipment shall be provided for all bypass pumping operations. The Contractor shall schedule his work such that all diversion pumping is performed during regular working hours and that gravity flow is restored at the end of each working day.

The Contractor is advised that brief flow stoppages may be made at the District's discretion. The duration of such stoppages will be brief and will depend on flow rates at the specific time of shutdown. It is advised that temporary flow stoppages must be scheduled during the low flow period of the day. It is anticipated the low flow period will generally occur between the hours of midnight and 6:00 a.m. However,

the existing trunk and interceptor sewers may be subject to large and sudden flow increases during wet weather. Any requests for such shutdowns shall be directed to the Engineer, in writing, at least one week in advance of such desired shutdown. Written authority from the District will be required for all temporary flow stoppages that involve line storage.

1.19 Removal of Existing Facilities

Where existing structures, piping, and other appurtenances are specified to be removed or are required to be removed in order to satisfactorily complete the work, such items shall be removed in an acceptable manner. Generally, when such items are removed the areas and surfaces from which items were removed shall be left with a finished and neat appearance compatible with the surrounding areas and surfaces. The Contractor shall do all work as necessary to comply with the above requirements.

(1) Temporary Removal

Obstructions, such as street signs, small culverts and end walls, fences, advertising signs, guard posts, and guard rails located in construction easements or rights-of-ways, may be removed provided they are promptly replaced to their original condition unless otherwise indicated. Temporary facilities shall be provided for street and traffic signs, culverts, guard posts, and guard rails until permanent facilities are replaced to their original condition and position, or a new position where required.

(2) Piping

Underground piping not to be incorporated into the work shall, unless otherwise shown or specified, be abandoned in place. Ends of abandoned pipes shall be plugged solid with 3-foot long concrete plugs by the Contractor.

(3) Disposal of Removed Materials and Equipment

All existing piping, equipment, and materials removed and not incorporated into the work will be classified by the District as either salvage or junk. The Contractor shall clean all salvage of loose debris and deliver it to the Salem Utility District WWTP located at 28733 Wilmot Road, Trevor, Wisconsin 53179. All salvage shall remain the property of the District. The Contractor shall remove all junk from the site.

1.20 Preconstruction Photographs and Video Tape

The Contractor shall provide preconstruction photographs and video tape of all pipeline routes outside of the development that are located in the right-of-way or an easement. The photographs and video tape shall be taken by an acceptable commercial photographer. The photographs shall be taken on 35 mm color film. The date, name of work, and the location where the photograph was taken shall be indicated on each print. Before construction may start, in any section, two 3½-inch by 5-inch glossy color prints of each exposure, together with the negative, shall be delivered to the Engineer, in two hard cover 3-ring binders with suitable protection for negatives and prints. Preconstruction photographs shall be taken along the centerline of the pipeline route at 100-foot intervals and at each approach to an intersection.

A VHS color video tape shall be taken of the area along and 30 feet to either side of the pipeline route. The video taping shall be made by panning the specified construction area slowly in order to adequately observe the pavement conditions, roadway and other improvements, and property condition. Two sets of the video tape(s) shall be delivered to the Engineer before the start of construction.

1.21 Shipping and Protection of Material and Equipment

All material and equipment shall be adequately and effectively protected against damage from moisture, dust, handling, or other cause during transport from the Contractor's premises to the site. Stiffeners shall be used where necessary to maintain shapes and to give rigidity.

During the interval between the delivery of the material and equipment to the site and installation, all material and equipment shall be safely stored in a manner acceptable to the Engineer. Material and equipment shall be stored in an enclosed space affording protection from weather, dust, and mechanical damage and providing favorable temperature, humidity, and ventilation conditions to ensure against equipment deterioration.

1.22 Construction Schedule

It shall be the responsibility of the Contractor to provide a construction schedule and to submit five (5) copies to the Engineer at the preconstruction conference. Construction meetings will be held at weekly intervals during construction to review the status of the project based on current information obtained directly at the site, and to devise changes, if necessary, to return the schedule to an "on time" projection.

The construction schedule shall include but not be limited to the following items:

* Submittal review and return to Contractor. The Contractor shall allow a minimum of one week for the Engineer's review of data.

* Material and equipment order, delivery, installation, and checkout.

* Delivery of pipe, manholes, fittings, and valves.

* Excavation, pipeline installation, backfilling, and grading work.

* Pipeline testing, sewer televising, and water main disinfection.

* Subcontracted items of work.

* Site restoration.

* Final cleanup.

In addition to completing the initial construction schedule, the Contractor shall supply a complete revised schedule every two weeks and provide five (5) copies to the Engineer for distribution to the District.

1.23 Cleaning Up

The Contractor shall not allow the site of the work to become littered with trash and waste material but shall maintain the site of the work in a neat and orderly condition throughout the construction period. No trash or other waste material may be placed in any trench or excavation. On or before the completion of the work, the Contractor shall removal all temporary structures built by him and rubbish of all kinds from any of the grounds which he has occupied and leave them in first-class condition to the satisfaction of the Engineer.

1.24 As-Built Drawings

Concurrent with performance of the work for the project, the Contractor shall prepare and maintain one neat and legible set of full-size project drawings indicating "as-built" construction. These drawings shall indicate any deviations or changes in the work for the project, including but not limited to changes in type, location, length or size for any item of work. "As-built" drawing mark-ups shall be made on a current, day-to-day basis with all mark-ups indicated at the time the applicable item of work is constructed or installed. Exact methods of preparing and maintaining "as-built" drawings shall be as required by the Engineer and said drawings shall be submitted to the Engineer each month for his review. Prior to the final acceptance of the work for the project, the Contractor shall submit to the Engineer and the Developer's Engineer for their files one set of said drawings showing all "as-built" work modifications. The Developer's Engineer shall use the "as-built" drawings to create record drawings for the project. The Developer shall submit three sets of record drawings to the Engineer for review and comment. The Developer's Engineer shall address the comments and submit five full size copies and five half size copies of the complete set of record drawings to the Engineer. The complete set of record drawings shall include sanitary sewer, water main, storm sewer, and street drawings for the development.

1.25 Permits

The Contractor shall be responsible for obtaining a pit/trench dewatering permit and, if necessary, a high capacity dewatering well permit from the Wisconsin Department of Natural Resources (WDNR) for the pipeline construction. Any and all other permits required to complete the work shall be secured and paid for by the Contractor. The Contractor shall provide two copies of all permits and approvals to the Engineer. The Contractor shall perform all work in accordance with the requirements of the permits and shall maintain a copy of the permits at the job site.

SECTION 2

SITEWORK

2.01 Site Preparation

(1) Scope

Site preparation includes all plant, labor, equipment, and appliances as required or necessary to clear and prepare the work site for further construction as shown and specified.

(2) General Requirements

Site preparation shall be performed in such a manner as not to harm adjacent structures, utilities, and existing landscaping or natural vegetation. The Contractor shall assume full responsibility for such disturbances and all costs for such repair, rehabilitation, or modification shall be borne by the Contractor.

(3) Construction

The Contractor shall perform all clearing and grubbing; and perform all demolition and removal work as required and shown for the proper construction and completion of the work.

(a) Clearing and Grubbing

The site shall be cleared of all trees, stumps, logs, tree trimmings, roots, brush, heavy sod, vegetations, rocks in excess of 6 inches, debris, and other obstructions of whatever kind or character as required to perform the work. Do not remove or damage trees that do not interfere with the work, and properly treat any damaged trees that can be saved. Where trees are required to be removed, the trunk and branches shall be completely removed, the tree stump shall be removed to a minimum depth of 12 inches below grade and the root systems left in place unless required to be removed because of interference in performing the work. All tree trunks and limbs greater than 2 inches in diameter shall be cut into 16-inch lengths, and those 2 inches or less in diameter shall be chopped into wood chips. All material shall be removed from the site of the work and disposed of by the Contractor in a manner acceptable to the Engineer. Open burning on the site of the work will not be permitted.

After clearing and grubbing, the topsoil shall be stripped. The topsoil may be stockpiled as required for reuse in areas to be seeded, or it may be removed from the site of the work and replaced with acceptable imported topsoil. If the topsoil is stockpiled, care shall be taken to prevent mixing with the subsoil. Excess topsoil shall be removed from the site of the work and disposed of by the Contractor.

The Developer and the District shall have prior claim to all surplus topsoil to be removed from the site. If such claim is exercised by the District, the material shall be deposited by the Contractor, at such points as designated by the Engineer up to 3 miles from the site of the work at no cost to the District. If the District wishes to use a site greater than 3 miles from the site of the work, the additional cost will be paid by the District. After delivery to a such designated location, the material shall be spread and leveled. If the Developer and District do not wish to claim any or all excavated material, the Contractor shall be responsible for obtaining a site for disposal of the material.

(b) Demolition and Removal

1. Structures

All structures to be removed including superstructures, foundation walls, footings, slabs and other on-grade or below-grade construction shall be demolished and removed. Excavations caused by removal of existing structures shall be cleaned of all waste and debris.

2. Pavements and Sidewalks

All pavements and sidewalks in areas to be excavated shall be removed. All asphaltic or concrete materials shall be removed from the site of the work as they are excavated.

Pavement shall be removed to a point not less than 12 inches from the edge of the trench. When the remaining section of asphalt pavement is less than 48 inches wide, the entire section shall be removed. If more than 75 percent of the pavement width requires removal, the entire pavement shall be removed. Concrete pavement shall be removed to the next joint unless otherwise indicated. The removal of pavement shall be made along sharp, clean, saw cut lines as shown or required. All concrete or asphalt shall be saw cut to a minimum depth of 3 inches.

Curb and gutter shall be saw cut, on a neat line, at a right angle to the curb face. If a saw cut in concrete curb and gutter falls within three feet of a construction joint, cold joint, expansion joint, or edge, the curb and gutter shall be removed to the joint or edge.

Where sidewalk removal is required, the full sidewalk square shall be replaced for sidewalks five feet wide or less, and for sidewalks greater than five feet wide, the entire width of sidewalk shall be removed up to a point not less than 12 inches from the edge of the trench. The sidewalk shall be saw cut on a neat line at right angles to the side of the sidewalk. If a saw cut would fall within three feet of a joint, the sidewalk shall be saw cut and removed at the joint.

A drop weight or other type of machinery for breaking pavement may be used when such usage does not become a nuisance or a source of damage to underground or adjacent utilities or structures. Before employing a drop weight, the Contractor shall verify that there are no nearby underground or adjacent utilities or structures that could be injured by its use. The District reserves the right to order the discontinuance of the use of a drop weight at anytime.

2.02 Erosion Control

(1) Scope

Erosion control includes all labor, material, equipment, and services as required or necessary to furnish, install, and maintain control systems to minimize erosion as shown and specified until site restoration, landscaping, and paving are complete.

(2) General Requirements

(a) Submittals

The Contractor shall submit manufacturer's data for silt fence materials, tracking pad rock, stone barrier rock, and erosion mats.

(b) Erosion Control Plan

The minimum erosion control measures are shown on the drawings. The Contractor shall submit a plan to supplement the minimum erosion control measures indicated on the drawings to accommodate the construction methods proposed for the project before construction is started. The Contractors supplement shall include all work that might create erosion. The plan supplement shall identify the location and type of control measures to be used for the entire project. The Contractor shall revise the erosion control plan and provide whatever additional erosion control measures are needed to satisfy all Federal, State, and Local regulations and requirements until site restoration, landscaping, and paving are complete.

(c) Inspections

The Contractor shall inspect the erosion control measures on a weekly basis as a minimum, and within 24 hours after each rainfall of 0.5 inches or greater or daily during periods of prolonged storm events. A report shall be prepared for each inspection. The Contractor shall submit a copy of the erosion control inspection reports to the Engineer each week.

(3) Materials

(a) Tracking Pad Rock

Tracking pad rock shall be a clean, hard, tough, durable 3-inch to 6-inch diameter crushed stone. All tracking pad rock shall be retained on a 3-inch U.S. Standard Sieve size. The crushed stone shall have substantially all the faces fractured so as to provide an angular interlocking material.

(b) Stone Barrier Rock

Stone barrier rock shall be well graded, crushed stone, with 50 percent of the stone being 3-inch diameter or greater. The crushed stone shall have substantially all the faces fractured so as to provide an angular interlocking material.

(c) Straw Bales

Straw bales for barriers shall be tightly compacted bales of oat, wheat, or barley straw with two plastic twin bindings.

(d) Filter Fabric

Filter fabric for silt fences shall be a woven or non-woven plastic material that is insect, rodent, mildew, and rot resistant. Non-woven fabric shall be needle punched, heat bonded, resin bonded or a combination thereof. The filter fabric shall have a grab tensile strength in the machine direction of 120 pounds and a grab tensile strength in the cross machine direction of 100 pounds when tested in accordance with ASTM D4632. The filter fabric shall have a maximum opening size equivalent to a No. 30 U.S. Standard Sieve and a minimum of 70% percent of strength retained after 500 hours of ultraviolet exposure when tested in accordance to ASTM D4355. The filter fabric shall have an integral support cord on each edge.

(e) Fence and Barrier Supports

Supports for silt fences shall be 1⅛" x 1⅛" pointed hickory or oak stakes. The stakes shall be a minimum of 12 inches longer than the width of the filter fabric. Supports for straw bale barriers shall be 1½" x 1½" pointed hardwood stakes. The stakes shall be a minimum of 12 inches longer than the thickness of the bale.

(f) Plastic Membrane

Plastic membrane shall be a polyethylene sheet with a minimum film thickness of 6 mils. The membrane joining material shall be a 2-inch wide pressure sensitive polyethylene tape.

(g) Temporary Seeding

Temporary seed shall consist of the following grasses:

Common Name	Percent Purity
Oats	98
Cereal Rye	97
Winter Wheat	95
Annual Ryegrass	97

Temporary seed shall be delivered to the site in the supplier's packages with the name of the supplier, and the grass varieties clearly marked on each package. Grass seed shall be stored and used in dry conditions.

(h) Mulch

Mulch shall consist of threshed straw of oats, wheat, or rye in compacted bales. Mulch shall be free from noxious weed seeds, harmful chemical residues, heavy metals, hydrocarbons, and other known environmental toxins in compacted bales. Mulch shall have a minimum fiber length of 6 inches.

(i) Tackifiers

Tackifiers shall be latex-base, guar gum, or hydrophilic polymers. Tackifiers shall not be asphalt based. Only tackifiers listed in the Wisconsin Department of Transportation Erosion Control Product Acceptability List (PAL) shall be used.

1. Latex-Base

Latex-base tackifier rate shall be in accordance with manufacturer's recommendation. The latex-base tackifier rate shall consist of a minimum of 15 gallons of adhesive and 250 pounds or pulp when mixed with 375 gallons of water. Latex-base tackifiers shall be BUTOFAN NS 268 as manufactured by BASF Corporation or equal.

2. Guar Gum Tackifier

Guar gum tackifier rate shall be in accordance with manufacturer's recommendations. The guar gum tackifier rate shall consist of a minimum 50 pounds of dry adhesive and 250 pounds of pulp when mixed with 1,300 gallons of water. Guar gum tackifiers shall be lawn tack as manufactured by Amturf; Second Nature Tacpac GTX as manufactured by Central Fiber Corporation; Landtack as manufactured by Erosion Control Technologies; Eco Tak-OP as manufactured by Eastern Products Incorporated; Finn A500 Hydro-Stick as manufactured by Finn Corporation; or equal.

3. Hydrophilic Tackifiers

Hydrophilic tackifiers rate shall be in accordance with manufacturer's recommendations. The hydrophilic tackifier rate shall consist of a minimum of 100 pounds of dry adhesive and 250 pounds of pulp when mixed with 1,300 gallons of water. Hydrophilic tackifiers shall be Exact-Tac (E-T) as manufactured by American Excelsion Company; Con-Tack A/T as manufactured by Con-Wed; Eco Tak-SAT as manufactured by Eastern Products Inc.; or equal.

(j) Erosion Mat

The erosion mat shall be constructed of straw, wood, coconut fiber, or other suitable plant residue, or plastic fibers, with a degradable plastic or biodegradable netting on one or both sides. Only erosion mats listed in the Wisconsin Department of Transportation Erosion Control Product Acceptability List (PAL) shall be used. Erosion mats are classified as either Class I, Class II, or Class III.

1. Class I Erosion Mat

a. General

Class I erosion mat shall be constructed of light duty organic fibers with degradable plastic or biodegradable netting. Class I erosion mat shall be either Type 'A' or Type 'B' erosion mat.

b. Class I Type 'A' Erosion Mat

Class I Type 'A' erosion mat shall be QuickMow Curlex 1, Curlex 1, or AEC Premier Straw (single net) as manufactured by American Excelsior Company; S31 or S31UVD as manufactured by Erosion Control Blanket; S75, DS75, DS150, or SC150 as manufactured by North American Green; S1 or S1RD as manufactured by SI Geosolutions; SNS as manufactured by SoilTex; SFI-1S or SFI-1SRD as manufactured by Straw Farm Industries; Excel SR-1, R1, or R1 Rapid Grow as manufactured by Western Excelsior.

c. Class I Type 'B' Erosion Mat

Class I Type 'B' erosion mat shall be Curlex High Velocity, AEC Premier Straw (double net), Curlex Excelsior II, Curlex LT, or AEC Premier Straw Coconut as manufactured by American Excelsior Company; S32 as manufactured by Erosion Control Blanket; ProGaurd DS as manufactured by Erosion Control Systems; S150, DS150, or SC150 as manufactured by North American Green; CS2 or S2 as manufactured by SI Geosolutions; DNS as manufactured by SoilTex; Excel SS-2, Excel SS-2 Rapid Grow, S-2, S-2 Rapid Grow, or SD-3 as manufactured by Western Excelsior.

2. Class II Erosion Mat

a. General

Class II erosion mat shall be constructed of organic fibers. Class II erosion mat shall be either Type 'A', Type 'B', or Type 'C'.

b. Class II Type 'A' Erosion Mat

Class II Type 'A' erosion mat shall be a woven fabric of a uniform open weave of single jute yarn. The jute yarn shall be of loosely twisted construction having an average twist of not less than one and one-half turns per inch. The average size of the warp and weft yarns shall be approximately the same. The woven fabric shall be furnished in rolled strips. The width of the strips shall be 48 inches, $\pm$1 inch. The fabric shall have 45 weft yarns, $\pm$2 per linear yard of length. The weight of the fabric measured under average atmospheric conditions shall be 92 pounds per 100 square yards, $\pm$10 percent. The fabric shall be non-toxic to vegetation.

c. Class II Type 'B' Erosion Mat

Class II Type 'B' erosion mat shall be constructed of photodegradable plastic or biodegradable netting. Type 'B' erosion mat shall be C32 as manufactured by Erosion Control Blanket; C125, C125BN, or C350 as manufactured by North American Green; LandLock C2 as manufactured by SI Geosolutions; DNC as manufactured by SoilTex; or AEC Premier Coconut as manufactured by American Excelsior Company.

d. Class II Type 'C' Erosion Mat

Class II Type 'C' erosion mat shall be constructed of a woven mat of 100% organic material. Type 'C' erosion mat shall be used in all environmentally sensitive areas where plastic netting is prohibited. Type 'C' erosion mat shall be Dekowe 700 or Dekowe 900 as manufactured by Belton Industries; or BioD-Mat 70 as manufactured by RoLanka.

(k) Sand Bags

Sand bags shall be made from a woven plastic fabric. Each bag shall have a securely attached tie of the same material. Sand bags shall have a minimum unfilled size of 14 inches by 26 inches, and shall be completely filled with a sandy soil. Sand bags shall have a minimum grab tensile strength of 95 pounds when tested in accordance with ASTM D4632 and a minimum UV stability of 70 percent when tested in accordance with ASTM D4355.

(l) Erosion Blocks

Erosion blocks shall be made from recycled crumb rubber. Erosion blocks shall be a filter block or a barrier block. Erosion blocks shall be 12 inches wide, 24 inches long, and 4 inches high. Erosion blocks shall weight at least 25 lbs each. Erosion blocks shall be ECO-BLOK or equal.

(m) Inlet Insert Basket

The inlet insert basket shall consist of a fabricated steel frame supporting a filter fabric liner. The basket shall be placed below the inlet or catch basin grate. Filter fabric liner shall be a single piece of double stitched, Type 'FF' geotextile fabric. One 4" x 6" oval hole shall be cut into each of the four panels approximately 12 inches from the bottom of the basket. The filter fabric liner shall be provided with flap pockets on both sides of the grate width. Rebar, steel rods, or wood 2 x 4's shall be inserted in the flap pockets. Rebar, steel rods or wood 2 x 4's shall extend 10 inches beyond the grate width and be secured to the grate with wire or plastic ties.

(n) Geotextile Fabric

Geotextile fabric shall be woven or non-woven polyester, polypropylene, stabilized nylon, polyethylene, or polyvinylidene chloride material that is insect, rodent, mildew, and rot resistant. Non-woven fabric shall be needle punched, heat bonded, resin bonded or a combination thereof. The geotextile fabric shall have a minimum grab tensile strength in the primary direction of 205 pounds when tested in accordance with ASTM D4632 and a minimum puncture strength in the primary direction of 80 pounds when tested in accordance with ASTM D4833. The geotextile fabric shall have a minimum apparent breaking elongation of 15 percent when tested in accordance with ASTM D4632, a maximum apparent opening size equivalent to a No. 30 U.S. Standard Sieve when tested in accordance with ASTM D4751, and a minimum permittivity of $0.12s^{-1}$ when tested in accordance with ASTM D4491.

(o) Erosion Logs

Only erosion logs listed in the Wisconsin Department of Transportation Erosion Control Product Acceptability List (PAL) as temporary ditch checks shall be used. Erosion logs shall be Curlex Sediment Log or AEC Premier 12-inch Wattle as manufactured by American Excelsior; Stenlog 12 as manufactured by Erosion Control Blanket; Triangular Silt Dike as manufactured by Triangular Silt Dike; Aspen Xcel Excelsior Log as manufactured by Western Excelsior; Ditch Chexx as manufactured by Filtrexx; or Bio-D Silt Check as manufactured by Ro Lanka.

(4) <u>Construction</u>

(a) General Requirements

Prior to construction, the Contractor shall install erosion and sedimentation control measures where shown on the plans or any place the Contractor, Engineer, or Owner feel it is necessary. The Contractor shall minimize disturbed areas and soil stockpiles. Disturbed areas shall be protected from erosion the same day it was exposed. If other areas develop a problem with erosion and sedimentation during construction, the Contractor shall construct whatever measures necessary to control the problem. Top soil or any other soils shall be stored in such a manner as not to cause any erosion or sedimentation. Disturbed areas and soil stockpiles that will be left inactive for more than 30 days shall be temporarily seeded within 7 days of disturbance.

(b) Tracking Pad

All access roads to the site from gravel or paved roadways shall have a tracking pad. Tracking pads shall consist of a 12-inch thick layer of compacted tracking pad rock. Tracking pad shall be the width of the egress point or a minimum of 10 feet wide, whichever is greater, and the minimum tracking pad length shall be 50 feet. Tracking pad installation shall not impede flow in the existing ditch line. A culvert shall be placed at every ditch or drainageway. Geotextile fabric shall be installed under tracking pads on sites with a high water table or where saturated conditions are expected.

Tracking pads shall be installed prior to clearing and grubbing. Tracking pads shall remain to the completion of the project. The Contractor shall remove the tracking pads when the utility work is complete.

(c) Silt Fences

Silt fences shall be installed to minimize erosion from overland flows. Silt fence shall consist of filter fabric supported on wooden stakes. The fence shall have a minimum height of 14 inches and a maximum height of 28 inches. The fabric shall be attached to the upslope side of the stake using ½-inch staples. The bottom edge of the fence shall be anchored by embedding 8 inches of the fabric in a 4-inch deep trench. The support stakes shall be installed at a maximum spacing of 3 feet for non-woven fabric and a maximum spacing of 8 feet for woven fabric and driven to a depth of not less than 20 inches.

Silt fence shall be placed parallel to the contour. The ends of the silt fence shall be extended upslope to prevent water from flowing around the ends of the fence. Additional silt fences shall be installed parallel to each other. The parallel fence spacing, based on slope, is shown in Table 1.

Table 1 Maximum Silt Fence Spacing

Slope, Percent	Maximum Fence Spacing, ft.
<2	100
2-5	75
5-10	50
10-33	25
>33	20

Silt fences shall be joined by wrapping the two end posts around each other and rolling the fabric together to produce a stable and secure joint or shall be overlapped the distance between two posts. Silt fences shall terminate by wrapping the fabric around the post until the staples are not visible.

(d) Erosion Control Barriers

Erosion control barriers shall be installed to minimize erosion from channelized flow. Straw bale barriers or stone barriers shall be used. The barriers shall be placed at a right angle to the direction of flow.

1. Straw Bale Barriers

Straw bale barriers shall consist of two continuous rows of straw bales anchored in a 4-inch deep trench with wooden stakes. The joints between adjacent rows of straw bales shall be staggered. Each bale shall have a minimum of two stakes driven to a depth of not less than 12 inches. The bales shall be set so the bindings are parallel to the ground. The upslope side of the bale shall be backfilled with 4 inches of excavated material. The ends of the bales shall be tightly abutted. Any gap shall be filled with straw.

2. Stone Barriers

Stone barriers shall consist of well graded angular stone keyed into the soil approximately 6 inches. Erosion mat shall be placed at the base of the stone barrier and extended a minimum of 6 feet downstream. Non-woven geotextile may be placed under the barrier and extended 6 feet downstream in place of erosion mat to ease in the installation and removal. Stone barriers shall have a minimum top width of 2 feet measured in the direction of flow with maximum slopes of 2:1 on the upslope and downslope.

(e) Drainage Diversions

Drainage diversions shall be constructed to divert channelized or sheet flow runoff from disturbed areas. Flow shall be diverted with a V-shaped or trapezoidal shaped ditch lined with a plastic membrane. The sides of the plastic membrane shall be anchored by embedding 8 inches of the membrane in a 4-inch deep trench on each ditch. The bottom of the membrane can be anchored with drain rock.

Drainage diversions shall have side slopes of 2:1 or less, a minimum top width of two feet, and a minimum berm height of 1.5 feet. Stone barriers shall be provided where velocity control are needed. Drainage diversions shall be stabilized immediately after they are constructed.

(f) Soil Stabilization

Soil stabilization measures shall be provided until restoration and final stabilization of the area is complete. Mulching and erosion mats shall be used for soil stabilization.

1. Mulching

Mulch shall be used on level to moderately sloping surfaces with a slope of three horizontal to one vertical (3:1) or less. The ground surface shall be free of rills and gullies prior to mulching. A minimum of 80 percent of unseeded areas and 70 percent of seeded areas shall be covered with mulch. Mulch shall be uniformly placed at a loose depth of 1 to 1½ inches for seeded sites and 1½ to 3 inches for non-seeded sites beginning at the top of the slope and proceeding downward. The mulch shall be placed at a rate of 1½ to 2 tons per acre for sites that are seeded and 2 to 3 tons per acre for sites that are not seeded. Mulch shall be applied within 24 hours of seeding.

The mulch shall be anchored at the time of spreading or immediately afterwards. Anchorage shall be achieved by punching the mulch into the soil to a depth of 1 to 3 inches with a dull weighted disc with notched edges spaced approximately 8 inches apart, applying a tackifier, or by covering the mulch with a woven netting. The netting shall be fastened with pegs or staples to form a grid spacing of 6 to 10 feet.

Latex-based tackifiers shall be applied at a minimum rate of 15 gallons of adhesive, 250 pounds of pulp, and 375 gallons of water per acre. Guar gum tackifiers shall be applied at a minimum rate of 50 pounds of dry adhesive, 250 pounds of pulp, and 1,300 gallons of water per acre. Hydrophilic polymer tackifiers shall be applied at a minimum rate of 100 pounds of dry adhesive, 250 pounds of pulp, and 1,300 gallons of water per acre.

2. Erosion Mat

Erosion mat shall be used to control channel erosion and may be used to control slope erosion. Permissible slopes and slope lengths for individual erosion mat classes for slope erosion control are shown on Table 2. Permissible slopes and slope lengths for individual erosion mat classes for channelized erosion control are shown on Table 3. All stones or clods over 1½ inches in diameter, and all roots, sticks, and

other debris that would interfere with the mat bearing on the soil shall be removed prior to placement of the mat. Any small stones or clods that prevent contact of the mat with the soil shall be pressed into the soil with a roller or other suitable means. Erosion mats shall be installed in accordance with the manufacturer's written instructions and the minimum requirements described herein.

Table 2 Slope Erosion Control Matrix

Erosion Control Mat	Maximum Length, ft.(b) Slope					
	<6:1	4:1	3:1	2.5:1	2:1	1:1
Class I						
Type 'A'	120	120	120	60	--	--
Type 'B'	120	120	120	60	30	--
Class II						
Type 'A'(a)	120	120	120	60	60	--
Type 'B'	120	120	120	120	60	--
Type 'C'	120	120	120	120	60	--

(a)Class II Type 'A' erosion control mat shall be used in conjunction with sod. Sod stakes shall be required.
(b)Maximum lengths determined by Wisconsin Department of Transportation (WDOT)

Table 3 Channel Erosion Control Matrix

Erosion Control Mat	Maximum Shear Stress lb/s.f.	Maximum Length, ft.(b) Channel Grade, percent				
		<2	2-4	4-6	6-9	9-12
Class I						
Type 'A'	--	--	--	--	--	--
Type 'B'	1.5	1,200	1,200	300	--	--
Class II						
Type 'A'(a)	1.5	1,200	600	--	--	--
Type 'B'	2.0	1,200	1,200	600	300	--
Type 'C'	2.0	1,200	1,200	600	300	--

(a)Class II Type 'A' erosion control mat shall be used in conjunction with sod. Upstream end of mat must be buried. Additional sod stakes shall be required.
(b)Maximum lengths were determined by WDOT. Maximum lengths were determined based on a 60-foot right-of-way from pavement center line and a 2-year rainfall event for Class I and Class II erosion control mats, and a 25-year rainfall event for Class III erosion control mat.

In general, mats placed in channels shall be installed by anchoring the upslope end in a 6-inch deep trench with staples and rolling the mat in the direction of flow. The center mat on the bottom of the channel shall be placed first, followed by the mats on the sides of the channel. The longitudinal edges of the mats shall be lapped a minimum of 6 inches and stapled. The transverse edges of the mats shall be lapped a minimum of 4 inches and stapled. The outside edges of the mat shall be anchored in a 6-inch deep trench and stapled. The outside edges of the mat shall be level with the adjacent ground to permit flow into the ditch. The terminal end of the mat shall be anchored in a 6-inch deep trench and stapled.

In general, mats placed on slopes shall be installed by anchoring the upslope edge or end in a 6-inch deep trench with staples and rolling the mat horizontally across the slope or vertically down the slope. The edges of the parallel mats shall be lapped a minimum of 4 inches and stapled. The terminal end of the mat shall be anchored in a 6-inch deep trench and stapled.

Class I erosion mat shall have a minimum rated service life of 6 months. Class II erosion mat shall have a minimum rated service life of 3 years.

The following products shall not be installed after September 1st of any calendar year: QuickMow Curlex 1 as manufactured by American Excelsior Company; S31UVD as manufactured by Erosion Control Blanket; DS75 or DS150 as manufactured by North American Green; S1RD as manufactured by SI Geosolutions; SFI-1SRD as manufactured by Straw Farm Industries; and R1 Rapid Grow, Excel SS-2 Rapid Grow, or S-2 Rapid Grow as manufactured by Western Excelsior.

(g) Dewatering Settling Basins

Dewatering settling basins shall be provided at the discharges of dewatering wells and drainage sumps or pits containing sediment. The basin may be an earthen basin, a stone barrier, a straw bale barrier, or other acceptable structure. The basin shall have a minimum area of 0.6 square feet per gallon per minute of discharge.

(h) Culvert and Inlet Protection Barriers

All existing and new culverts shall be provided with protection barriers. Straw bale barriers shall be used to protect the inlet of culverts. Straw bale fences shall be used to protect inlets and catch basins in unpaved areas. Inlets in paved areas shall be protected with filter fabric secured with sand bags, erosion blocks, or an inlet insert basket.

(i) Geotextile Fabric

Prior to installation of the geotextile fabric, the area shall be graded and all stones, roots, sticks, or other matter that might prevent the fabric from completely contacting the soil shall be removed. Geotextile fabric shall be installed loosely, parallel to the direction of water movement. Fabric joints shall be sewn or overlapped at least 24 inches in the direction of flow. Staples or pins shall be used to hold the geotextile fabric in place as necessary. Fabric shall not be exposed longer than 48 hours prior to covering.

(j) Erosion Logs

Erosion logs shall be installed to minimize erosion from channelized flow. Erosion logs shall be installed per manufacturer's recommendations. In general, erosion logs shall be installed perpendicular to the flow line and shall extend far enough so that the ground level at the ends of the logs are higher than the low point on the crest of the log. The height of the erosion log shall be 10 inches above the flow line of the channel when installed.

(5) Maintenance

All erosion control measures shall be maintained until restoration and final stabilization of the site are complete. Sediment shall be removed on a regular basis after each precipitation event, destroyed structures shall be replaced, damaged structures shall be repaired, and eroded areas shall be refilled as required.

Tracking pads shall be inspected and maintained on a daily basis. The tracking pad shall remain clog free. All clogged areas of the tracking pad shall be scarified and/or have the clogged rock replaced with clean tracking pad rock. The tracking pad installation shall not relieve the Contractor from cleaning tracked material from the access roadways on a daily basis.

Street sweeping shall be performed on a daily basis when material is deposited on paved roadways. Gravel roadways shall be scraped as necessary to remove any material deposited on the gravel surface. Additional gravel shall be added to replace any gravel lost during maintenance of the road.

Silt fence shall be inspected and maintained on a weekly basis and within 24 hours after every precipitation event that produces 0.5 inches of rain or more during a 24-hour period. All damaged or decomposed silt fence, and flow channels under or around the fence shall be repaired or corrected. Sediment shall be properly disposed of once the deposits reach one-half the height of the fence.

Inlet insert baskets shall be inspected and maintained on a weekly basis and within 24 hours after every precipitation event that produces 0.5 inches of rain or more during a 24-hour period. All sediment with the inlet insert basket shall be properly disposed of once the deposits have accumulated between one-third and one-half the design depth of the basket or when the basket is no longer functioning as designed.

All temporary erosion control measures shall be removed after restoration and final stabilization of the site are complete unless otherwise indicated.

(6) Basis of Payment

No separate payment will be made for erosion control work. All costs involved in erosion control shall be included in the unit price of the work it is associated with.

2.03 Trenching

(1) Scope

Trenching includes all plant, labor, equipment, appliances, and materials as required or necessary to excavate, bed, and backfill, for the construction of ditching, pipelines, and appurtenances as shown and specified.

(2) General Requirements

(a) Submittals

The Contractor shall submit test reports which include moisture density relationship, and gradation results prepared by a certified testing laboratory acceptable to the Engineer for Type "A", "B", "C", "D", "E", and "F" material. A labeled bag containing a sample of each material shall be submitted with the results. No material shall be used unless it has been accepted by the Engineer.

(b) Testing

The standard test to define maximum densities of all compaction work shall be ASTM D1557. All densities shall be expressed as a percentage of the maximum density obtained in the laboratory by the foregoing standard procedure.

The Contractor shall perform density tests on fills and backfills periodically throughout the job when requested by the Engineer. The Contractor shall permit the Engineer to sample, test, and inspect in-place materials at times selected by the Engineer and without additional compensation or additional time.

(3) Materials

(a) Fill and Backfill

1. Type "A"

Type "A" material shall be a clean gravel-sand mixture free from organic matter and, when tested in accordance with ASTM C117 and C136, shall conform to the following gradation requirements:

U.S. Standard Sieve Size	Percent by Weight Passing
¾ in.	100
3/8 in.	70-90
#4	55-85
#10	45-75
#40	20-50
#100	0-10
#200	0-5

2. Type "B"

Type "B" material shall be a select granular material free from organic matter and of such size and gradation that the desired compaction can be readily attained. When tested in accordance with ASTM C117 and C136, it shall conform to the following requirements:

U.S. Standard Sieve Size	Percent by Weight Passing
3 in.	100
1½ in.	95-100
#4	35-100
#10	10-100
#40	0-60
#100	0-30
#200	0-10

The coefficient of uniformity shall be 3 or greater. The material may be clean natural sand or gravel, select excavation or a mixture thereof.

3. Type "C"

Type "C" material shall be unclassified material obtained from excavation or from any other source. The material shall be free from peat, wood, roots, bark, debris, garbage, rubbish or other extraneous material. The maximum size of stone shall not exceed 6 inches in diameter. Not less than 95 percent of the particles shall pass a 2-inch U.S. Standard Sieve size.

4. Type "D"

Type "D" material shall be a clean, washed, sound and durable well-graded crushed rock, crushed gravel, or gravel. When tested in accordance with ASTM C136, this material shall conform to the following ASTM C33 gradation requirements:

U.S. Standard Sieve Size	Percent by Weight Passing
1 in.	100
¾ in.	90-100
3/8 in.	20-55
#4	0-10
#8	0-5

5. Type "E"

Type "E" material shall be clay with at least 90 percent of the particles passing a No. 200 U.S. Standard Sieve and a plasticity index greater than 15.

6. Type "F"

Type "F" material shall be a select, granular material free from organic matter, and when tested in accordance with ASTM C117 and C136, shall conform to the following requirements:

U.S. Standard Sieve Size	Percent by Weight Passing
1 in.	100
3/8 in.	40-75
#4	25-60
#10	15-45
#200	3-10

The material shall be hard, tough, durable crushed stone. At least 45 percent of the particles retained on the No. 4 U.S. Standard Sieve shall have at least one fractured face.

(b) Bedding Concrete

Bedding concrete shall have a minimum 28-day compressive strength of 3000 psi. The minimum cement content shall be 5½ bags per cubic yard. The slump shall not exceed 4 inches. Cement shall be of one brand unless otherwise permitted and shall conform to ASTM C150 Type I or IA. Aggregate used in the manufacture of concrete shall conform to the quality and grading requirements of ASTM C33. For bedding concrete the maximum size of aggregate shall be 1 inch. Water for bedding concrete shall be clean and free from injurious amounts of acid, oil, alkali, organic matter or other deleterious substances. Reinforcing steel, when required, shall consist of grade 60 deformed bars conforming to the requirements of ASTM A615.

(4) Construction

(a) General Requirements

1. Work Limits

Length of trench excavated in advance of the pipe laying shall be kept to a minimum, and in no case shall it exceed 50 feet unless otherwise authorized. The total length of open trench shall not exceed 100 feet for each main pipe laying operation unless otherwise authorized. Not more than one street crossing may be obstructed by the same trench at any one time unless otherwise authorized. The length of unrestored work area and total unfinished trench construction shall not exceed a length of 800 feet, for each main pipe laying operation unless otherwise authorized. Trench construction will not be considered completed until all restoration is completed. A section of trench shall not be considered as finished until excavation, construction, backfilling, compaction, surface restoration and replacement, and cleanup operations have been completed.

2. Control of Water

The Contractor shall provide all necessary machinery, appliances, and equipment to keep excavation free from water during construction, and shall dewater and dispose of the water so as to minimize discharge of turbid water to surface water and not to cause injury to public or private property, or to cause a nuisance or a menace to the public. Before dewatering is started, the Contractor shall obtain acceptance from the Engineer for the method, installation and details of the dewatering system he proposes to use.

The Contractor shall at all times have on hand sufficient pumping equipment and machinery in good working condition for all ordinary emergencies, including power outage, and shall have available at all times competent workmen for the operation of the pumping equipment. The dewatering systems shall not be shut down between shifts, on holidays or weekends, or during the work stoppages without written permission from the Engineer. The control of groundwater shall be such that softening of the bottom of excavations or formation of "quick" conditions or "boils" shall be prevented. Dewatering systems shall be designed and operated so as to prevent the removal of the natural soils.

During excavating, construction of pipelines and appurtenances, and backfilling, excavations shall be kept free of water. The static water level shall be drawn down a minimum of 1-foot below the bottom of the excavation so as to maintain the undisturbed state of the natural soils and allow the placement of any fill or backfill to the required density. The dewatering system shall be installed and operated so that the groundwater level outside the excavation is not reduced to the extent that would damage or

endanger adjacent structures or property. The release of groundwater to its static level shall be performed in such a manner as to maintain the undisturbed state of the natural foundation soils, prevent disturbance of compacted fill or backfill and prevent flotation or movement of all pipelines and appurtenances.

3. Removal of Obstructions

The Contractor shall remove all rock, stones, debris and all obstructions of whatsoever kind or character, whether natural or artificial, encountered in the work. Material shall be removed from the site of the work and disposed of in a manner acceptable to the Engineer.

4. Sheeting, Shoring, and Bracing

The Contractor shall provide all permanent and temporary sheeting and shoring including all labor, material, equipment and tools required or as necessary to maintain the excavation in a condition to furnish safe working conditions, to permit the safe and efficient installation of all items of work, and to protect adjacent property. The Contractor shall be held liable for any damage which may result to neighboring property from excavation or construction operations. When sheetpiling and timbers in excavations are removed, they shall be withdrawn in a manner so as to prevent subsequent settlement of the pipe.

Nothing in this specification shall be deemed to allow the use of protective systems less effective than those required by the Occupational Safety and Health Administration (OSHA) and the Department of Industry, Labor, and Human Relations (DILHR).

5. Portable Trench Box and Sliding Trench Shield

Portable trench boxes and sliding trench shields approved by the Wisconsin Department of Industry, Labor, and Human Relations may be used as long as in the judgment of the Contractor, job conditions warrant such use. Use of the shield shall not relieve the Contractor of any liability for damages to persons or property occurring from or upon the work of constructing the pipeline or appurtenances occasioned by negligence or otherwise, growing out of a failure on the part of the Contractor to leave in place in the trench sufficient sheeting and bracing to prevent the caving or moving of the ground, or disturbance of the completed work or any of the surface or subsurface structures.

Care shall be taken when a trench box or shield is moved ahead so as not to pull the already jointed pipe apart or leave voids around the pipe wall. When required by the Engineer, the Contractor shall provide an acceptable method of rechecking line, grade and horizontal location of the pipe after the shield has been moved ahead. If the pipe has moved, it shall be reset to the proper line and grade.

Where a concrete cradle or envelope is required, a suitable spacer between the concrete and the shield shall be provided. Tarpaper or other suitable material shall be used to prevent a bond between the spacer and the concrete, so as to permit moving of the shield without disturbing the pipe, cradle or envelope. The width of the trench shield or box shall be such that a minimum 6-inch horizontal clearance is maintained between the pipe and shield at all times.

Any voids between the trench box or shield and the undisturbed trench wall within the bedding section (bottom of trench to top of initial backfill) shall be filled with bedding material, immediately after the box or shield is positioned.

6. Unstable Foundations

When the trench bottom is wet, soft, or spongy so that, in the opinion of the Engineer, it will not provide a proper foundation for the pipe, the trench shall be over excavated until a firm foundation is obtained. The over excavated portion of the trench shall be backfilled with such material and in such a manner as may be required by the Engineer. All over excavation and associated backfilling shall be at no cost to the District. Where the distance to stable ground is excessive the Developer's Engineer shall submit other types of foundation for approval by the Engineer.

7. Over Excavation

Whenever the excavation is carried beyond the lines and grades shown on the project drawings, or as determined by the Engineer, the Contractor shall at his own expense, backfill all such excavated space with such material and in such a manner as may be required by the Engineer. The space beneath and around concrete structures which was over excavated shall be thoroughly compacted when backfilling or, if deemed necessary by the Engineer, shall be backfilled with concrete at the Contractor's expense.

(b) Excavation

1. General

Unless otherwise indicated, excavation for pipelines and appurtenances shall be open cut using an unrestricted trench. When a restricted trench is specified or indicated, sheeting, shoring, and bracing shall be provided to limit the width of the trench to the width of the bedding section. The Contractor may use any method of excavation that will not damage or endanger adjacent structures, utilities, or property, or disturb the natural soils at or below the bottom of the excavation.

2. Trench Width

The maximum allowable width of trench measured at the top of the pipe shall be the outside diameter of the pipe exclusive of bells and collars, plus 24 inches, and such maximum width shall be inclusive of all trench timbers unless otherwise indicated. A minimum of 6 inches shall be maintained between the pipe and the trench wall. The trench walls shall be kept vertical from the bottom of the trench to the top of the pipe, wherever possible.

Where the normal trench width below the top of the pipe is exceeded for any reason, the Contractor, at his own expense, shall furnish an adequate section for the actual trench width. This may be accomplished by furnishing a stronger pipe, a better bedding section, or providing concrete encasement, whichever is an adequate section as determined by the Engineer. When the pipe specified is strong enough for the actual trench width, as determined by the Engineer, no further provisions need be made for this greater trench width.

Where wide trench construction is specified, the width of the trench at the top of the pipe is not limited. The bedding section width for wide trench construction shall be extended 2½ diameters on either side of the pipe or to the trench wall, whichever is less.

3. Excavated Materials

All excavated material to be used as backfill shall be stockpiled in a manner that will not endanger the work, cause an obstruction, or block drainage. Excavated material not to be used for backfill shall be removed from the site of the work.

The Developer and the District shall have prior claim to all surplus excavated material. If such claim is exercised by the District, the material shall be deposited by the Contractor, at such points as designated by the Engineer up to 3 miles from the site of the work at no cost to the District. If the District wishes to use a site greater than 3 miles from the site of the work, the additional cost will be paid by the District. After delivery to a such designated location the material shall be spread and leveled. If the Developer and the District do not wish to claim any or all excavated material, the Contractor shall be responsible for obtaining a site for disposal of the material.

(c) Bedding Sections

All pipelines shall be uniformly supported at every point between joints using one of the bedding sections described herein. A small depression shall be provided, as needed, at each joint to insure the barrel of the pipe is properly supported. The depression shall be no larger than necessary to accomplish proper joint assembly.

In wet, but otherwise stable trenches, the contractor may, if acceptable to the Engineer, over excavate the bottom of the trench and install not less than 6 inches of Type "D" material. The Type "D" material shall be compacted by a power operated tamper. In rock excavation the minimum depth of the bedding section below the pipe shall be increased 6 inches and filled with Type "A" or Type "F" material compacted to 95 percent of the maximum dry density.

1. Sanitary Sewer Bedding

The pipeline shall be bedded on Type "F" material compacted to 95 percent of the maximum dry density and placed on a flat trench bottom. The Type "F" material shall have a minimum thickness of 4 inches under the barrel and shall extend up one-half the outside diameter of the pipe barrel at the sides. The remainder of the bedding section shall be filled to a minimum depth of 12 inches over the pipe with Type "A" or Type "F" material compacted to 90 percent density.

2. Pressure Sewer Bedding

The pipeline shall be bedded on Type "A" material compacted to 95 percent of the maximum dry density and placed on a flat trench bottom. The Type "A" material shall have a minimum thickness of 4 inches under the barrel and shall extend up one-half the outside diameter of the pipe barrel at the sides. The remainder of the bedding section shall be filled to a minimum depth of 12 inches over the pipe with Type "A" compacted to 90 percent density.

3. Water Main Bedding

The pipeline shall be bedded on Type "A" material compacted to 95 percent of the maximum dry density and placed on a flat trench bottom. The Type "A" material shall have a minimum thickness of 4 inches under the barrel and shall extend up one-half the outside diameter of the pipe barrel at the sides. The remainder of the bedding section shall be filled to a minimum depth of 12 inches over the pipe with Type "A" compacted to 90 percent density.

4. Concrete Encasement

The pipeline shall be set in bedding concrete placed in a flat bottom trench. The bedding concrete shall have a minimum thickness of 6 inches. Concrete shall extend to undisturbed earth at the walls of the trench. The pipe shall be supported on solid concrete masonry units. Multiple pours of concrete shall be used to prevent flotation of the pipeline. Concrete encasement shall start and stop at pipe joints.

(d) Backfill

1. General

Backfill shall be constructed at the locations and to the lines and grades indicated. Unless otherwise indicated structural backfill shall be used below all existing and proposed paved walkways, paved bike paths, sidewalks, curb and gutter, and pavement and shoulder areas within the right-of-way of Town roads and streets. Engineered backfill shall be used in all other areas within the right-of-way of Town roads and streets. Dewatering must be maintained during the placement of backfill. After completion of all construction below the elevation of final grade, and prior to backfilling, the excavation shall be cleaned of all debris.

The required degree of compaction shall be obtained by using power-operated tampers, rollers, vibrators, or other suitable equipment. Compaction shall be done in such a manner that will not damage adjacent or buried facilities. Each layer shall be compacted to the specified density prior to placing subsequent layers. The thickness of the loose layer may be increased when in-place density tests, acceptable to the Engineer, show that the specified density can be obtained.

2. Backfilling Trenches

After the pipe bedding section has been accepted the trench shall be backfilled within 24 hours. During backfilling the Contractor shall protect the pipeline from damage or shifting. Portable hand held equipment shall be used for compacting the initial backfill. The initial backfill shall not be less than 3 feet thick. After the initial backfill is placed the subsequent backfill may be compacted using wheeled type or vehicle mounted compaction equipment.

3. Backfill Systems

a. Structural Backfill

Structural backfill shall be Type "B" material placed in horizontal layers not exceeding 8 inches in loose depth. The material shall be moisture conditioned to within 3 percent of optimum moisture content so the required degree of compaction may be obtained. Each layer shall be compacted to 90 percent of maximum density, except when the backfill is subgrade for walks, roadways, foundations, or slabs the upper three feet shall be compacted to 95 percent of maximum density.

b. Engineered Backfill

Engineered backfill shall be Type "C" material placed in horizontal layers not exceeding 8 inches in loose depth. The material shall be moisture conditioned to within 3 percent of optimum moisture content so the required degree of compaction may be obtained. Each layer shall be compacted to 90 percent of maximum density, except when the backfill is subgrade for walks, roadways, access pads, foundations or slabs the upper three feet shall be compacted to 95 percent of maximum density.

c. Common Backfill

Common backfill shall be Type "C" material placed in horizontal layers not exceeding 12 inches in loose depth. Each layer shall be compacted to 85 percent of maximum density.

d. Drain Rock

Drain rock shall be Type "D" material placed in horizontal layers not exceeding 6 inches in loose depth. Each layer shall be compacted with a power tamper.

e. Impervious Backfill

Impervious backfill shall be Type "E" material placed in horizontal layers not exceeding 6 inches in loose depth. The material shall be moisture conditioned to within 3 percent of optimum moisture content so the required degree of compaction may be obtained. Each layer shall be compacted to 95 percent of maximum density.

f. Gravel Backfill

Gravel backfill shall be Type "F" material placed in horizontal layers not exceeding 8 inches in loose depth. The material shall be moisture conditioned to within 3 percent of optimum moisture content so the required degree of compaction may be obtained. Each layer shall be compacted to 90 percent of the maximum dry density, except when the backfill is subgrade for walks, roadways, foundations, or slabs, the upper three feet shall be compacted to 95 percent of the maximum dry density.

g. Aggregate Slurry Backfill

Aggregate slurry backfill shall consist of a concrete mix with the cement deleted. Aggregate slurry backfill material shall be mixed in the following quantities:

1350 lbs sand (ASTM C33 fine aggregate)
750 lbs No. 1 stone (ASTM C33 size number 67)
1150 lbs No. 2 stone (ASTM C33 size number 4)
25 gals. (+0 to -0.5 gal) water per cubic yard

The material shall be placed in a clean concrete mix truck and thoroughly mixed with sufficient water to produce a slump of approximately 3 inches. The mixture shall be deposited directly into the trench from concrete mix trucks. Just prior to placing the slurry, the mixer shall be run at mixing speed to insure a uniform mixture.

(e) Finish

All areas covered by the work shall be graded uniformly to the elevations shown on the drawings or as required for restoring the surface to its original condition. The degree of finish shall be that ordinarily obtainable from a bladegrader.

2.04 Boring and Jacking

(1) Scope

Boring and jacking includes all plant, labor, equipment, and materials as required or necessary to furnish, install, and test steel casing and carrier pipes as shown and specified.

(2) General Requirements

(a) Submittals

The Contractor shall submit manufacturer's data for the casing and carrier pipe. Information shall include the name of the pipe manufacturer, the dimensions of the pipe, and details on the materials and method of pipe manufacture or fabrication.

(b) Jacking Plan

The Contractor shall submit a jacking plan for each installation. The plan shall identify the method and equipment to be used, the location and size of the jacking pits, and the limits of the proposed jacking.

(3) Materials

(a) Carrier Pipe

The carrier pipe to be installed within casing pipe shall conform to the same requirements as pipe to be installed by open cut excavation, unless noted otherwise. Carrier pipe for water main pipelines shall have restrained joints, or a joint restraint system shall be provided.

(b) Casing Pipe

Casing shall be steel pipe conforming to ASTM A53 Grade B, ASTM A139 Grade B, or pipe fabricated in accordance with AWWA C200 using ASTM A36 steel. The minimum inside diameter of the casing shall not be less than 4 inches larger than the maximum outside diameter of the carrier pipe. The minimum wall thickness shall be as required by permit requirements or the Contractor's method of construction, which ever is greater, but in no case shall it be less than the following values.

	MINIMUM WALL THICKNESS, INCHES	
CASING SIZE	HIGHWAY INSTALLATION	RAILROAD INSTALLATION
18" O.D.	0.187 (3/16)	0.312 (5/16)
20" O.D.	0.187 (3/16)	0.344 (11/32)
22" O.D.	0.187 (3/16)	0.375 (3/8)
24" O.D.	0.250 (1/4)	0.406 (13/32)
26" O.D.	0.250 (1/4)	0.438 (7/16)
28" O.D.	0.250 (1/4)	0.469 (15/32)
30" O.D.	0.312 (5/16)	0.469 (15/32)
34" O.D.	0.312 (5/16)	0.531 (17/32)
36" O.D.	0.344 (11/32)	0.531 (17/32)

(c) Cement Grout

1. General

Cement grout shall be composed of cement, sand, admixtures, and water proportioned and mixed as specified. Cement shall be Type II Portland cement conforming to ASTM C150. Sand shall conform to ASTM C33 and shall be graded so that 100 percent by weight will pass a $^{3}/_{8}$-inch U.S. Standard Sieve, and at least 45 percent by weight will pass a No. 40 U.S. Standard Sieve. Grout shall be used for pressure grouting and drypack grouting as applicable.

2. Design Mix

Cement grout shall be a mixture of one part cement to two parts sand with a water/cement ratio of 0.55. Drypack grout shall be a mixture of one part cement, two parts sand, and the minimum amount of water required for mixing and placing.

(d) Sand Slurry

1. General

Sand slurry shall be composed of flyash, sand, and water proportioned as specified. Flyash shall be Class "C" or "F" conforming to the requirements of ASTM C618. Sand shall conform to ASTM C33 and shall be graded so that 100 percent by weight will pass a No. 8 U.S. Standard Sieve, and at least 45 percent by weight will pass a No. 40 U.S. Standard Sieve. Air-entraining admixture shall be Darex AEA by W.R. Grace & Company or equal and shall conform to ASTM C260. Slurry shall be used for filling the space between the casing and carrier pipes.

2. Design Mix

Sand slurry shall be a mixture of five parts sand, one part flyash, air entrainment (one ounce per 430 pounds of sand), and water (one gallon per 37.5 pounds of sand).

(e) Dry Sand

Sand shall conform to ASTM C33 and shall be graded so that 100 percent by weight will pass a No. 8 U.S. Standard Sieve, and at least 45 percent by weight will pass a No. 40 U.S. Standard Sieve.

(f) Lumber

All lumber permanently incorporated in the work shall be treated Douglas Fir or Southern Pine. Treatment shall be with an alkaline copper quaternary (ACQ) salt solution. Salt retention shall not be less than 0.40 pounds per cubic foot of wood. All treated lumber shall be suitably marked.

(4) <u>Construction</u>

(a) General

The Contractor shall construct a jacking pit of sufficient size to accommodate the backstop, jacks, pushing frame and pipe to be jacked. The pit shall have guide rails or timbers to keep the pipe in alignment and on grade. A push frame shall be provided to evenly distribute the jacking pressure to protect the

ends of the pipe being jacked. A minimum of two hydraulic jacks shall be used. The casing pipe or carrier pipe being jacked shall be fitted with a hardened steel cutting edge. The casing shall be jacked upgrade, if possible, to facilitate drainage. All pipe shall be on site before starting jacking.

(b) Casing Installation

The casing shall be pushed into place as the soil is excavated from the inside of the pipe. The excavation shall not precede the leading edge of the casing unless it is necessary to remove a large obstruction. Excavation for small diameter casing shall be accomplished by a boring auger. Excavation for large diameter casings shall be accomplished by hand or mechanical means. Once the jacking operation is started it shall be continued without interruption until completion. Casing pipes shall be jointed with a continuous weld for the full circumference. The welded joints shall be capable of resisting all jacking stresses and shall provide a watertight seal.

The casing pipe in its final position shall be straight and true in alignment and grade. There shall be no space between the earth and the outside of the casing. If it is necessary to over excavate, the location shall be identified and pressure grouted after the casing is in place.

(c) Carrier Pipe Installation

After the casing has been installed and accepted by the Engineer, the carrier pipe shall be installed. The carrier pipe shall have not less than two pair of wood skids per pipe section. The skids shall be securely strapped to the carrier pipe with steel strapping material at least 2 inches wide. The skids shall be sized so that the carrier pipe will meet the line and grade as indicated on the drawings and be centered as close as possible in the casing. The carrier pipe shall be pushed and pulled into place in such a manner that there is no opportunity for a joint to be opened. The carrier pipe length shall be adjusted so that the end extends past the end of the casing 12 to 18 inches. After the carrier pipe is installed the ends of the casing shall be sealed with 2-inch pressure treated planks or brick and mortar. The space between the casing and carrier shall be filled with a sand slurry or dry sand where indicated.

(d) Pressure Grouting

Pressure grouting, where required, shall be done by qualified mechanics under supervision of experienced foremen. The apparatus for mixing and placing cement grout shall be of a type acceptable to the Engineer and shall be capable of effectively mixing and stirring the grout and forcing it into the holes or grout connections in a continuous, uninterrupted flow at any specified pressure up to a maximum of 15 pounds per square inch. Gages shall be provided, with an accurate meter reading in cubic feet to tenths of a cubic foot, for controlling the amount of mixing water used in the grout. In addition to the grout mixer, holdover mechanical agitator tanks shall be provided. All grout shall be pumped with a duplex piston-type pump.

Prior to grouting, systems and holes to be grouted shall be thoroughly washed clean. No washing will be required for grouting soil voids outside pipe cylinders or casing pipes. Grouting once started shall be completed without stoppage. In case of breakdown of equipment, the Contractor, at the Engineer's option, shall wash out the grouting system. Grout pressure shall be maintained until grout has set.

(e) Sand Slurry Application

Sand slurry shall be pumped or poured into the void between the casing and carrier pipe by means of a filler pipe. The filler pipe shall be installed at the top of the seal at the low end of the casing and a vent pipe shall be installed at the seal on the other end of the casing. The filler and vent pipes shall be PVC and extend up to an elevation above the highest part of the casing or to ground level. The top of the filler

pipe shall be located at an elevation approximately 6 inches higher than the vent. Sand slurry shall be added to the void between the casing pipe and carrier pipes until the slurry flows from the vent pipe. After 24 hours, the filler and vent pipes shall be removed at the end seals.

(f) Dry Sand Application

Dry sand shall be pneumatically applied. The filler pipe shall be placed at the top of the far end of the casing and slowly withdrawn as the casing is filled with sand.

(5) Testing

After the carrier pipe is installed the ends shall be sealed and braced and it shall be tested in accordance with the requirements for the carrier pipe. The carrier pipe may be tested separately or it may be tested with the pipeline segment it is associated with.

2.05 Tracer Wire

(1) Scope

Tracer wire includes all labor, materials, and equipment as necessary and required to furnish, install, and test a copper tracer wire on non-metallic pressure sewer pipelines, potable water mainlines, sewer laterals, pressure sewer laterals, water services, and associated pipelines, as shown and specified.

(2) General Requirements

(a) General

Tracer wire shall be provided for all non-metallic pressure sewer pipelines, potable water mainlines, sewer laterals, pressure sewer laterals, water services, and associated pipelines unless approved by the Engineer.

(b) Submittals

The Contractor shall submit manufacturers data for the tracer wire, waterproof splice, tape, tracer wire access riser, and inspection casting. The Contractor shall submit a procedure for performing the continuity test.

(3) Materials

(a) Tracer Wire

Tracer wire shall be NEC Type THWN, 600 volts No. 12 AWG solid copper wire.

(b) Access Riser

Access riser shall consist of a tracer wire access box and a 2-inch diameter PVC Sch. 40 DWV access pipe. The tracer wire access box shall have a cast iron collar and cover, pentagon shape nut, and two AISI Type 304 stainless steel terminal bolts. The tracer wire access box shall be as manufactured by Valvco, Inc. or equal.

(c) Waterproof Splice Connectors

The waterproof splice connectors shall be rated for a minimum of 600 volts and for use with underground conductors. Waterproof splice connectors shall consist of a mechanical connector, vinyl mastic, and vinyl electrical tape. The mechanical connector shall be a Type H-high strength split bolt connector as manufactured by Blackburn or equal. Vinyl mastic shall be Scotch 2200 Vinyl Mastic Pad or Scotch 2210 Vinyl Mastic Roll as manufactured by 3M Electric Products Division or equal. Vinyl electrical tape shall be Scotch Super 33+ or Super 88 Vinyl Electrical Tape as manufactured by 3M Electric Products Division or equal.

(4) Construction

(a) General

Tracer wire shall be installed along all non-metallic pressure sewer pipelines, potable water mainlines, sewer laterals, pressure sewer laterals, water services, and associated pipelines after all adjustments in line and grade have been completed unless approved by the Engineer.

Access risers with inspection castings located in traffic areas shall be brought to finished grade of the roadway prior to placing the binder course. A temporary asphalt ramp shall be provided around the access riser from the top of the inspection casting to the binder course. The ramp shall be sloped to provide protection to the access riser and inspection casting until the surface course is constructed. The ramp shall be a minimum diameter of 4 feet around the access riser and inspection casting. The ramp shall be removed prior to placement of the surface course. The surface course shall be constructed to the top of the access riser.

(b) Tracer Wire on Mainline Pipelines

1. Pressure Sewer Pipelines

Tracer wire shall be taped at the center and each end of each length of pipe. Tracer wire shall be run from pressure sewer discharge manhole to pressure sewer flushing connection. Access risers shall be provided at all tees, crosses, and at the end of all pipelines. Not more than one splice will be permitted per run. Tracer wire shall extend up the access riser to the terminal bolts on the access box cover with 5 feet of extra wire stored in the access pipe.

2. Water Main Pipeline

Tracer wire shall be taped at the center and each end of each length of pipe. Tracer wire shall be run from hydrant to hydrant or from hydrant to access riser. Access risers shall be provided at all hydrants, tees, crosses, and at the end of all pipelines. Not more than one splice will be permitted per run. Tracer wire shall extend up the access riser to the terminal bolts on the access box cover with 5 feet of extra wire stored in the access pipe.

(c) Tracer Wire on Lateral Pipelines

1. Sewer Lateral Pipeline

Tracer wire shall be taped at the center and each end of each length of sewer lateral pipe. Tracer wire shall be run from end of the sewer lateral to the sanitary sewer pipeline. No splices will be permitted between the end of the sewer lateral and sanitary sewer pipeline. Access risers shall be provided at the end of all sewer laterals. A 1-foot long metal rod shall be provided at each lateral connection to the sanitary sewer mainline. The metal rod shall be installed horizontally 6 inches above the sanitary sewer mainline. Tracer wire shall be connected to the metal rod at the sanitary sewer mainline. Tracer wire shall extend up the access riser to the terminal bolts on the access box cover with 5 feet of extra wire stored in the access pipe.

2. Pressure Sewer Lateral Pipeline

Tracer wire shall be taped at the center and each end of each length of pressure sewer lateral pipe. Tracer wire shall be run from curb stop to corporation stop. No splices will be permitted between curb stop and corporation stop on pressure sewer laterals. Tracer wire shall be spliced to the pressure sewer pipeline tracer wire. Tracer wire shall extend up the curb stop box to the cap and terminate with 2 feet of extra wire wrapped around the top of the curb stop box just below the cap.

3. Water Service Pipeline

Tracer wire shall be taped every 5 feet along the water service pipe. Tracer wire shall be run from curb stop to corporation stop. No splices will be permitted between curb stop and corporation stop on water services. Tracer wire shall be spliced to the water main pipeline tracer wire. Tracer wire shall extend up the curb stop box to the cap and terminate with 2 feet of extra wire wrapped around the top of the curb stop box just below the cap.

(d) Tracer Wire Splices

1. Mainline Tracer Wire Splices

Mainline tracer wire splices shall be completed with a waterproof splice connector. The mechanical connector shall be wrapped with a 3½" x 4" minimum vinyl mastic and taped for direct bury in accordance with the manufacturer's recommendations.

2. Lateral Pipeline Tracer Wire Splices

Lateral pipeline tracer wire shall be connected to the mainline tracer wire with a waterproof splice connector. The mainline tracer wire conductor shall not be cut. The mainline tracer wire conductor shall run continuously through the lateral pipeline splice. The mechanical connector shall be wrapped with a 3½" x 4" minimum vinyl mastic and taped for direct bury in accordance with the manufacturer's recommendations.

(5) Testing

A continuity test shall be performed for all tracer wires. All tracer wire failing the continuity test shall be repaired and the test shall be repeated.

2.06 Site Restoration

(1) Scope

Site restoration includes all labor, materials, equipment, and services as required or necessary to replace and restore all surfaces to their original condition, after construction of utilities, that are not indicated to be removed, modified, repaired, replaced, or improved, as shown and specified.

(2) General Requirements

(a) General

Whenever any of the work is performed on or through property other than that owned by the Developer or the District, the Contractor shall furnish the District, before final acceptance of the work by the District, a written release from the owner of the property, or proper authority acting for the owner of the property affected, stating that the restoration of property has been satisfactorily accomplished. The Contractor shall send a notice to all easement grantors by certified mail, return receipt requested, a copy of which shall be filed with the District. The notice shall contain the following: the date, district name, project name, property owner, parcel no., property address, and mailing address.

> The undersigned Contractor has completed the restoration of the construction site on which you have granted an easement for installation of certain utilities and improvements. Please review and return this form to Kaempfer & Associates, Inc., 650 E. Jackson Street, P.O. Box 150, Oconto Falls, Wisconsin, 54154, within 10 days from the above date. If the site restoration is not completed to your satisfaction, arrangements will be made immediately upon receiving this form to view the site and restore the site in conformance with the standard specifications.
>
> _____
> Name of Contractor
>
> _____
> Address of Contractor
>
> _____
> Signature of Contractor
>
> Is the site restoration completed to your satisfaction? _____ Yes _____ No
>
> Signature of Property Owner _____ Date _____
>
> If not, please state the reason(s): _____
> _____
> _____
> _____
> _____

Upon receipt of a notice of deficiency, the Engineer will examine the site and the contractor shall complete all work that is required for site restoration. If, in the opinion of the District, the release is arbitrarily withheld by the owner of the property, the District may in its sole discretion, accept the portion of the work involved and cause final acceptance of project to be issued.

(b) Submittals

The Contractor shall submit details on the materials and methods he proposes to use for each type of surface or site.

(c) Qualifications

Replacement and restoration shall be performed by a subcontractor regularly engaged in the type of work to be performed.

(3) Materials

Unless noted otherwise all materials shall conform to the requirements of these specifications and the applicable sections of the "State of Wisconsin, Department of Transportation, Standard Specifications for Highway and Structure Construction," 2003 Edition.

(4) Construction

(a) General

When the work is completed on construction of pipelines and appurtenances, that portion of the surface disturbed by construction for this project shall be left in an equal or better condition as it was before the commencement of the work, unless noted otherwise. All restoration work shall be promptly and regularly maintained in such condition for a period of one year after acceptance of the work. Maintenance work shall apply under this project. Maintenance measures needed for ordinary wear and tear from normal use shall not be at the expense of the Contractor. All repairs required because of unsatisfactory trench backfilling, however, shall be at the expense of the Contractor.

(b) Structures

The Contractor shall rebuild all structures removed in as good a condition as found, and shall repair all existing structures which may be damaged as a result of the work during this project.

(c) Curb, Gutters, Driveways, and Sidewalks

All curb, gutters, driveways, sidewalks and similar structures that are broken, damaged or otherwise affected due to the Contractor's operations shall be reconstructed by the Contractor. Reconstruction shall be of the same kind of material with the same finish, and in not less than the same dimensions as the original work. Repairs shall be made by removing and replacing the entire portions between joints or scores and not merely refinishing any damaged part. All work shall match the appearance of the existing improvements as nearly as possible. Minimum construction requirements are specified in "Restoration of Concrete Pavement and Appurtenances".

(d) Roads and Streets

All roads and streets in which the surface is removed, broken or damaged, or in which the ground has caved or settled due to work during this project, shall be completely resurfaced to the original thickness and brought to the original grade and crown section unless otherwise indicated. Before resurfacing material is placed, edges of pavements shall be trimmed back far enough to provide clean, solid, vertical faces, and shall be free of any loose material. Concrete pavement shall have the entire portions between joints

removed and reconstructed. Roadways used by the Contractor for hauling materials, equipment, supplies, or other work, shall be cleaned and repaired if the condition of the roadway is damaged or otherwise affected due to the Contractor's operations. Minimum construction requirements are specified in "Restoration of Asphalt Roadway Pavement".

(e) Lawn and Unimproved Areas

All lawn and landscaped areas that are damaged by actions of the Contractor shall be restored as nearly as possible to their original condition, or as required by the terms of the easements or permits on file at the Utility District. All trees in lawns and landscaped areas that are too large to be replaced, shall be protected from damage. All unimproved areas that are damaged by the actions of the Contractor shall be seeded or restored as nearly as possible to their original condition, or as required by the terms of the easements or permits on file at the Utility District. Trees and brush in unimproved areas shall not be replaced unless otherwise noted. Minimum construction requirements are specified in "Seeding".

(f) Waterways, Channels, and Drainage Ditches

All waterways, channels, drainage ditches, culverts, and similar facilities which are damaged by actions of the Contractor shall be restored as nearly as possible to their original condition. Culverts that are located in the pipeline alignment shall be removed, salvaged, and reinstalled. All culverts damaged by the Contractor shall be replaced by the Contractor. Where necessary, the Contractor shall provide temporary facilities or temporarily realign such water courses to maintain a continuously serviceable facility until it is restored to its original location and condition. Restoration of such facilities shall be as shown and specified.

2.07 Restoration of Asphalt Roadway Pavement

(1) Scope

Restoration of asphalt roadway pavement includes all labor, materials, plant and equipment to restore gravel and asphalt roads, drives, and parking areas.

(2) General Requirements

(a) General

Whenever any part of this specification refers to the Standard Specifications, it shall be understood that it is referring to "State of Wisconsin, Department of Transportation, Standard Specifications for Highway and Structure Construction," 2003 Edition.

(b) Submittals

The Contractor shall submit an asphaltic pavement mix design, aggregate base course gradation results, and a labeled bag containing a sample of the aggregate base course (upper base layer) and sub-base course (lower base layer) for the Engineer's review. No material shall be used until it is accepted by the Engineer.

(3) Materials

(a) Aggregate Base Course (Base Aggregates)

Materials for aggregate base course (upper base layer) shall conform to the gradation requirements for the dense 1¼-inch base aggregate in Section 305 of the Standard Specifications. Materials for aggregate sub-base course (lower base layer) shall conform to the gradation requirements for the dense 3-inch base aggregate in Section 305 of the Standard Specifications. Materials for aggregate shoulders shall conform to the gradation requirements for the dense ¾-inch base aggregate in Section 305 of the Standard Specifications.

(b) Asphaltic Pavements

Materials for asphaltic pavements shall conform to Section 450, Section 455, and Section 460 of the Standard Specifications for the particular class type and mixture of material specified. Asphalt cement (asphaltic binder) shall be performance grade (PG) 58-28. Asphaltic pavement shall be hot mix asphalt mixture Type E-1, unless otherwise noted. Aggregate for the binder course (lower layer) and surface course (upper layer) shall conform to the gradation requirements in Section 460 of the Standard Specifications for the nominal size aggregate as follows:

Course Thickness (Layer Thickness) inches	Nominal Size Aggregate	
	Binder Course (Lower Layer)	Surface Course (Upper Layer)
1½	½"	½"
1¾	½"	½"
2	¾"	½"
2¼	¾"	½"
2½	¾"	½"
2¾	¾"	--
3	¾"	--
3¼	¾"	--
3½	¾"	--
3¾	¾"	--
4	¾"	--

(c) Tack Coat

Tack coat shall meet the requirements of ASTM D977 for Grades RS-1 or RS-2 emulsified asphalt.

(4) Construction

(a) General

Roads, drives, parking areas, aggregate base course, and pavement shall be constructed to the widths, grades and lines shown on the drawings. Thicknesses shown are for compacted material. Aggregate base course shall not be constructed until the Engineer has accepted the subgrade. Maximum variation in finished grade shall be plus or minus 0.05 feet.

(b) Subgrade Preparation

In cut areas over which the aggregate base is to be placed, the natural subgrade shall be scarified to a depth of 6 inches and then compacted to 95 percent of the maximum dry density as determined by ASTM D1557. In fill areas, the subgrade shall be constructed of engineered fill above the stripped surface.

(c) Aggregate Base Course (Base)

Aggregate base course shall be constructed in accordance with Section 301 and Section 305 of the Standard Specifications. Base course shall be compacted to 95 percent of maximum dry density as determined by ASTM D1557. Base course material shall be of the type and thickness shown on the drawings.

(d) Temporary Pavement

In paved areas, a temporary 2-inch thick bituminous (cold mix) concrete pavement shall be placed and maintained over the finished aggregate base course until final surface replacement is made. The temporary pavement covering shall be placed within three days of placing the finished aggregate base course.

(e) Pavements

1. General

Pavements shall be constructed to the widths, grades and lines shown on all drawings. Thicknesses shown are for compacted material. The aggregate base course shall be accepted by the Engineer prior to final surfacing.

2. Tack Coat

The vertical faces of curbs, gutters, existing pavements, structures, and all horizontal surfaces in actual contact with asphalt mixes shall be painted with a thin, complete coating of emulsified asphalt to provide a closely bonded, watertight joint.

3. Asphalt Pavement

Asphalt pavement shall be constructed in accordance with Section 450, Section 455, and Section 460 of the Standard Specifications. Binder course (lower layer) and surface course (upper layer) shall be of the thickness shown on the drawings.

2.08 Restoration of Concrete Pavement and Appurtenances

(1) Scope

Restoration of concrete roadway pavement and appurtenances includes all labor, materials, equipment, and services necessary to construct curbs, curb and gutters, sidewalks, and concrete pavement.

(2) General Requirements

(a) General

Whenever any part of this specification refers to the Standard Specifications, it shall be understood that it is referring to "State of Wisconsin, Department of Transportation, Standard Specifications for Highway and Structure Construction," 2003 Edition.

(b) Submittals

1. Mix Design

Prior to placing any concrete, the Contractor shall submit a concrete mix design for the Engineer's review. Design data shall include the name of the concrete supplier; manufacturer, type of aggregate; proportional weights of cement, aggregate, and water per cubic yard of concrete; and quantity, product and data sheet of the air-entraining admixture. No material shall be used until it is accepted by the Engineer.

2. Accessories

The Contractor shall submit manufacturer's literature for reinforcing steel, expansion joint material, and curing compound for the Engineer's review.

(3) Materials

(a) Concrete

Concrete shall have a minimum 28-day compressive strength of 4000 psi. The minimum cement content shall be six bags per cubic yard. The slump shall not exceed 4 inches. Cement shall be of one brand unless otherwise permitted and shall conform to ASTM C150 Type I. Aggregate used in the manufacture of concrete shall conform to the quality and grading requirements of ASTM C33. The maximum size of aggregate shall be 1 inch. Water for bedding concrete shall be clean and free from injurious amounts of acid, oil, alkali, organic matter or other deleterious substances.

(b) Reinforcement

Reinforcing steel shall consist of deformed bars of the size called for the drawings. Steel shall conform to ASTM A615 and shall be Grade 60. Welded wire fabric shall conform to the requirements of ASTM A185.

(c) Curing Agent

The curing agent for concrete pavement shall be white pigmented and shall conform to the requirements of ASTM C309. The curing agent shall be ready-mixed for immediate use without alteration, and shall adhere to the damp concrete forming a continuous, coherent, flexible covering without breaks or pin-holes. Unless a heavier application is specified by the manufacturer, the application rate shall be one gallon of curing agent per 200 square feet of surface.

(4) Construction

(a) Concrete

Unless otherwise provided, all concrete shall be Ready-Mixed Concrete and shall conform to the requirements of ASTM C94. Air-entrained concrete shall have an air content of not less than 4.5 percent nor more than 7.5 percent by volume. The consistency of the concrete shall be uniform and such that the cement and other ingredients are uniformly distributed throughout and such that the mortar will cling to the coarse aggregate. The concrete shall not be sufficiently wet to flow and segregate, nor of a mealy, dry consistency. As soon after finishing operations as the free water has disappeared, the surface of the concrete shall be sealed by spraying on it a uniform coating of curing agent.

(b) Reinforcing Steel

Reinforcing steel, before positioned, shall be cleaned thoroughly of mill or rust scale or other coating that will destroy or reduce the bond. Reinforcing steel shall be positioned accurately and secured against displacement by using annealed iron wire or suitable clips at intersections, and shall be supported by concrete or metal chairs or spacers, or metal hangers, in accordance with the Concrete Reinforcing Steel Institute Manual of Standard Practice.

(c) Concrete Sidewalk

The Contractor shall verify that the foundation for the sidewalk has been properly prepared and is at the correct elevation before setting forms. The concrete shall be placed on a moist foundation, deposited to the required depth, and consolidated and spaded sufficiently to bring the mortar to the surface, after which it shall be struck off and floated. Before the mortar has set, the surface shall be steel troweled and brushed. The edges of sidewalks and edges adjacent to expansion joints or construction joints shall be finished with an edging tool having a radius of ¼ inch.

(d) Concrete Pavement

The Contractor shall verify that the foundation for the concrete pavement has been properly prepared and is at the correct elevation before setting forms. The base course shall be compacted and shall have a minimum thickness of 4 inches. The concrete shall be placed on a moist foundation, deposited to the required depth, and consolidated and spaded sufficiently to bring the mortar to the surface, after which it shall be struck off and floated. Before the mortar has set, the surface shall be steel troweled and brushed. The edges of sidewalks and edges adjacent to expansion joints or construction joints shall be finished with an edging tool having a radius of ¼ inch.

(e) Concrete Curb and Gutter

The Contractor shall verify that the foundation for the curb and gutter has been properly prepared as is at the correct elevation before setting forms. The base course shall be a minimum of 6 inches thick and shall extend not less than 6 inches behind the curb. The concrete shall be deposited to the proper depths, thoroughly consolidated, spaced against the forms, and struck off and finished to the required section.

The face surfaces of the curb, gutter, or curb and gutter shall be thoroughly troweled and brushed. The back edge of the curbs, the edge of the gutter adjacent to the pavement, and edges adjacent to expansion joints or contraction joints formed by separator plates shall be finished with an edging tool having a radius of ¼ inch. Any honeycombed areas occurring along forms on backs of curbs or edges of gutters shall be pointed with mortar.

2.09 Access Pad

(1) Scope

Access pad includes all labor, materials, plant and equipment to construct gravel access pads.

(2) General Requirements

(a) General

Whenever any part of this specification refers to the Standard Specifications, it shall be understood that it is referring to "State of Wisconsin, Department of Transportation, Standard Specifications for Highway and Structure Construction," 2003 Edition.

(b) Submittals

The Contractor shall submit aggregate base course gradation results, and labeled bags containing a sample of the aggregate base course (upper base layer) and a sample of the aggregate sub-base course (lower base layer) for the Engineer's review. No material shall be used until it is accepted by the Engineer. The Contractor shall submit manufacturer's data for culvert pipe, coupling bands, and endwalls.

(3) Materials

(a) Aggregate Base Course (Base Aggregates)

Materials for aggregate base course (upper base layer) shall conform to the gradation requirements for the dense 1¼-inch base aggregate in Section 305 of the Standard Specifications. Materials for aggregate sub-base course (lower base layer) shall conform to the gradation requirements for the dense 3-inch base aggregate in Section 305 of the Standard Specifications.

(b) Culverts

1. Culvert Pipe

Culvert pipe shall be corrugated metal pipe (CMP). The minimum size of culverts shall be 12 inches. CMP 12 inches to 24 inches shall be 16 gauge galvanized steel. CMP over 24 inches to 36 inches shall be 14 gauge galvanized steel. All CMP shall meet the requirements of ASTM A760.

2. Culvert Coupling Bands

Culvert coupling bands shall consist of a single or two piece corrugated band which meshes with the corrugations of the pipe ends. The bands shall be provided with bolting lugs or angles for tightening. Coupling bands shall be 16 gauge galvanized steel and shall meet the requirements of ASTM A760.

3. Culvert Endwalls

Culvert endwalls shall be of three piece construction consisting of a sloped section, toe plate, and a connector rod. Endwalls 12 to 24 inches in diameter shall be 16 gauge galvanized steel. Endwalls 24 to 36 inches in diameter shall be 14 gauge galvanized steel.

(4) Construction

(a) General

Access pads shall be constructed to the widths, grades and lines shown on the drawings. Thicknesses shown are for compacted material. Aggregate base course shall not be constructed until the Engineer has accepted the subgrade.

(b) Subgrade Preparation

In cut areas, the natural subgrade shall be scarified to a depth of 6 inches and then compacted to 95 percent of the maximum dry density as determined by ASTM D1557. In fill areas, the subgrade shall be constructed of engineered fill above the stripped surface.

(c) Aggregate Base Course (Base)

Aggregate base course shall be constructed in accordance with Section 301 and Section 305 of the Standard Specifications. Base course shall be compacted to 95 percent of maximum dry density as determined by ASTM D1557. Base course material shall be of the type and thickness shown on the drawings.

(d) Culvert Excavation

The maximum allowable width of trench measured at the top of the pipe shall be the outside diameter of the pipe plus 24 inches. A minimum of 6 inches shall be maintained between the pipe and trench wall.

(e) Culvert Pipe Installation

The pipeline shall be bedded on solid undisturbed earth in a flat bottom trench. The finished subgrade shall be accurately prepared by means of hand tools so that the subgrade beneath the center line of the pipe shall be within 0.03 feet of a straight line between joints and compacted to 95 percent density. The lower segment of the pipe shall be in contact with the bedding for the required depth throughout its entire full length. Outside circumferential laps shall be placed facing upstream. After the pipe is laid, the remainder of the bedding section shall be filled to a minimum depth of 6 inches over the pipe with Type "B" or "C" material as required to match adjacent backfill and compacted to 95 percent density. The final installed alignment shall be such that no reverse grades exist and no point shall vary from a straight line drawn from inlet to outlet by more than 2 percent horizontally and vertically of the culvert length or 1 foot, whichever is less. Pipe shall be firmly jointed by form-fitting coupling bands. Endwall sections shall be attached to pipe by connecting bands or other means as recommended by the manufacturer.

(f) Culvert Backfilling

The remaining trench section shall be constructed with Type "B" or "C" material as required to match the adjacent backfill. Backfill shall be compacted without damaging or displacing the pipe. After being bedded and backfilled, pipe shall be protected by an adequate cover of embankment before heavy equipment is permitted to cross during access pad construction. Pipe distorted more than 5 percent of nominal dimensions, ruptured, or broken shall be replaced.

2.10 Seeding

(1) Scope

Seeding shall include all labor, materials, equipment, and services necessary to topsoil, seed, and mulch the site of the work.

(2) General Requirements

(a) General

Whenever any part of this specification refers to the Standard Specifications, it shall be understood that it is referring to "State of Wisconsin, Department of Transportation, Standard Specifications for Highway and Structure Construction," 2003 Edition.

(b) Submittals

The Contractor shall submit supplier's grass seed data showing percent by weight of the seeding mixture and fertilizer.

(3) Materials

(a) Topsoil

Topsoil material shall be free of stones and consist of pulverized rich earth with no clods larger than 1-inch in diameter and suitable for growing grass.

(b) Fertilizer

Fertilizer used shall be standard commercial grade granular form with a minimum of 10 percent nitrogen, 10 percent phosphoric acid and 10 percent potash.

(c) Seed

The seed mixtures shall conform to mixtures, No. 30 and 40 in Section 630 of the Standard Specifications.

(d) Mulch

Mulch material shall consist of straw or hay chopped to a length of 6 inches or less, free of noxious weed seeds and objectionable foreign materials.

(4) Construction

(a) Grading

Areas to be seeded shall be graded and shaped to the exact finish grade and contour as shown on the plans. Grades not indicated on the plans shall be uniformly leveled on slopes between grade points and existing finish grade. Abrupt changes in grade shall be rounded.

(b) Lawn Areas

1. Topsoil

Topsoil shall be placed at a minimum depth of 3 inches.

2. Fertilizer

Fertilizer shall be applied at a uniform rate of 20 pounds per 1,000 square feet.

3. Seed

The seed shall be mixture No. 40 and applied at a uniform rate of 5 pounds per 1,000 square feet.

4. Mulching

Mulching shall be applied in accordance with Section 627 of the Standard Specifications. After mulching, the areas shall be rolled to achieve a good soil seed contact.

(c) Unimproved Areas

1. Fertilizer

Fertilizer shall be applied at a uniform rate of 15 pounds per 1,000 square feet.

2. Seed

The seed shall be mixture No. 30 and applied at a uniform rate of 3 pounds per 1,000 square feet.

3. Mulching

Mulching shall be applied in accordance with Section 627 of the Standard Specifications. After mulching, the areas shall be rolled to achieve a good soil seed contact.

(5) Clean Up

Prior to final acceptance, the Contractor shall perform final weeding, rake all planted areas, and clear all debris from work site.

SECTION 3

SANITARY SEWER

3.01 General Requirements for Gravity and Pressure Sewer Construction

(1) Scope

General requirements for gravity and pressure sewer construction includes all labor, materials, and equipment necessary to construct gravity and pressure sewers and appurtenances, as shown and specified.

(2) General Requirements

The gravity and pressure sewer pipeline shall be of the size and material shown on the drawings. Where two materials or sizes are shown, the Contractor may select the size and material. Where no material is shown, the Contractor may select the material to be used from the materials specified for the project.

(3) Materials

(a) Mortar

Mortar and mortar materials shall conform to the requirements of ASTM C270 for Type "M" mortar. Cement shall be ASTM C150 Type II. Masonry sand shall conform to the requirements of ASTM C144. Mortar for reinforced masonry shall conform to the requirements of ASTM C476 for Type "PM" or "PL" mortar.

(b) Masonry Units

Concrete brick shall be Grade "N" Type II conforming to the requirements of ASTM C55. Brick shall be 2¼ inches high, $3^5/_8$ inches thick and $7^5/_8$ inches long. Concrete block shall be Grade "N" Type II conforming to the requirements of ASTM C90. All block shall have $7^5/_8$-inch by $15^5/_8$-inch face dimensions and shall have a minimum thickness of $7^5/_8$ inches. Concrete block for manholes shall conform to the requirements of ASTM C139.

(c) Transition Couplings

Transition couplings for joining gravity sewer pipe of different materials or outside diameter in sizes up to 15 inches in diameter shall consist of an elastomeric PVC sleeve and two AISI Type 304 stainless steel bands. Couplings shall be Fernco Flexible Couplings, Indiana Seal flexible couplings, or equal. Transition couplings for pipes larger than 15 inches in diameter shall be designed specifically for the application by the pipe manufacturer.

(d) Insulation

Insulation used for frost prevention shall be extruded polystyrene foam insulation with a minimum thickness of 2 inches with a minimum "R" value of 10.0 (at 75 degrees Fahrenheit mean temperature). Insulation shall have a minimum compressive strength of 40 psi.

(4) Construction

(a) Laying of Pipe

The point of commencement for laying of gravity sewer pipe shall be the lowest point in the proposed sewer line. The pipe shall be laid with the bell end of bell and spigot pipe, or with the receiving groove end of tongue and groove pipe pointing upgrade. Any other procedure shall be followed only with permission of the Engineer.

All pipe shall be laid uniformly to line and grade so that the finished sewer will present a uniform bore. Noticeable variations from true alignment and grade will be considered sufficient cause for rejection of the work.

When a new sewer is to be connected to an existing sewer or structure, the Contractor shall uncover the end of the existing sewer or the point of connection to the existing structure to allow any adjustments in line and grade to be made before any pipe is laid.

As the work progresses, the interior of the sewer shall be cleaned of all dirt and debris. Where cleaning after laying is difficult because of small pipe size, a suitable swab or squeegee shall be kept in the pipe and pulled forward past each joint after joining has been completed. Alternative methods of cleaning must be approved by the Engineer.

(b) Construction Bulkhead

Before extending a gravity sanitary sewer, the Contractor shall provide a concrete masonry bulkhead in the existing sewer immediately downstream of the point of connection. This bulkhead shall be left in place until the new sewer has been cleaned of accumulated water and debris and has been accepted.

(c) Protection of Open Pipe

During all intermissions in construction of the sewer, the open face of the last pipe laid shall be capped, plugged, or bulkheaded so as to prevent sand, water, earth, or other materials from entering the pipe.

(d) Joining Pipe of Different Material or Outside Diameter

Where specified or required, gravity sewer pipelines of different material or outside diameter shall be joined with the transition coupling. The joint shall then be encased in bedding concrete if a flexible transition coupling is used.

(e) Thrust Restraint

All pressure sewer piping shall have restrained joints or shall be provided with a joint restraint system to prevent movement caused by hydraulic thrust and pressure. Exposed pressure sewer piping shall have restrained joints. Horizontal buried pressure sewer piping with rubber gasket joints, unless noted otherwise, shall be restrained by thrust blocking. Thrust blocks shall be cast against solid undisturbed ground and shall be installed so as to prevent contact or interference with pipe or fitting joints. Fittings shall be wrapped in plastic to prevent the concrete from bonding to the surface of the fitting. If adequate support against undisturbed soil cannot be obtained, metal harness anchorages or joint restraint systems shall be used. Vertical buried pressure sewer piping shall have a joint restraint system or the pipe and fittings shall have an acceptable type of restrained joint. Rodding from harness systems shall not extend into structures.

(f) Pipe Insulation

All sewer pipeline constructed within 5½ feet of the ground surface or within 2 vertical feet of a storm sewer shall be protected from frost with insulation. The minimum width of rigid insulation varies with the depth of ground cover as shown in the following table:

Depth of Pipeline (Feet)	Minimum Width of Insulation (Feet)
2.0	9
2.5	8
3.0	7
3.5	6
4.0	5
4.5	4
5.0	3

The insulation shall be placed immediately above the bedding section or a minimum of 6 inches above the sewer pipeline.

3.02 Polyvinyl Chloride (PVC) Sewer Pipe and Fittings

(1) Scope

Polyvinyl chloride (PVC) sewer pipe and fittings includes all labor, materials, and equipment as necessary and required to furnish, install, and test 8-inch to 15-inch diameter sewer pipe and fittings, as shown and specified.

(2) General Requirements

The Contractor shall submit manufacturer's data for the pipe, fittings, gaskets, gasket lubricant, and appurtenances.

(3) Materials

(a) Pipe and Fittings

PVC sewer pipe and fittings 8 inches through 15 inches in diameter shall meet the requirements of ASTM D3034. All PVC sewer pipe and fittings shall have a standard dimension ratio (SDR) of 35 unless otherwise indicated. All fittings and accessories shall be as manufactured and supplied by the pipe supplier, unless otherwise specified. All fittings and accessories shall be of the same strength and material as the sewer.

(b) Joints

PVC sewer pipe and fittings shall have bell and spigot joints meeting the requirements of ASTM D3212. The bell and spigot ends shall be integrally formed with the pipe or fitting. Rubber gaskets shall meet the requirements of ASTM F477. Rubber gasket lubricant shall be made to be used with PVC pipe and fittings.

(4) Construction

(a) General

PVC sewer pipe and fittings shall be installed in accordance with this section using a sanitary sewer bedding section unless noted otherwise. The Contractor shall provide a bell hole at each joint. The bell hole shall be no larger than necessary to accomplish proper joint assembly. When the joint has been made, the void under the bell shall be filled with bedding material to provide adequate support to the pipe throughout its entire length.

(b) Joining the Pipe

Assemble all joints in accordance with recommendations of the manufacturer. Verify that the interior of the bell and the exterior of the spigot are clean and free of foreign material. Apply joint lubricant to the exterior of the spigot. The joint lubricant should extend back from the edge of the spigot 2 to 3 inches and should cover the entire circumference of the spigot. Insert the spigot into the bell and push the spigot into the bell to insertion depth reference mark.

Proper jointing may be verified by rotation of the spigot by hand or with a strap wrench. If unusual joint resistance is encountered or if the insertion mark does not reach the reference mark, disassemble the joint, inspect for damage, reclean the joint components, and repeat the assembly steps. Note that fitting bells may permit less insertion depth than pipe bells.

For shorter than standard pipe lengths, field cuts may be made with either hand or mechanical saws or plastic pipe cutters. Ends shall be cut square and perpendicular to the pipe axis. Spigots shall have burrs removed and ends smoothly beveled by a mechanical beveler or by hand with a rasp or file. Field spigots shall be stop-marked with felt tip marker or wax crayon for the proper length of assembly insertion. The angle and depth of field bevels and lengths to stop-marks shall be comparable to factory pipe spigots.

(c) Lateral Connections

Lateral connections shall be made with a wye, unless otherwise noted. The wye shall be placed so the hub is at an angle of 22½ degrees or 45 degrees above the horizontal, unless otherwise noted. A wye with a $^{1}/_{8}$ bend shall be used on shallow laterals extending horizontally from the mainline sewer. The wye for shallow laterals shall be placed so the hub is installed horizontally. The lateral hub shall have an SDR 35 gasketed bell. The hub of the wye shall have a diameter of 4 inches, unless otherwise noted.

(5) Testing

All PVC sewer pipe shall be tested for deflection. PVC pipe used for sanitary sewer shall be tested for leakage by the low pressure air test, unless specified otherwise.

3.03 Polyvinyl Chloride (PVC) Pressure Pipe and Fittings for Gravity Sewers

(1) Scope

Polyvinyl chloride (PVC) pressure pipe and fittings for gravity sewers includes all labor, materials, and equipment as necessary and required to furnish, install, and test 8-inch to 12-inch PVC pressure pipe and fittings, as shown and specified.

(2) General Requirements

The Contractor shall submit manufacturer's data for the pipe, fittings, gaskets, gasket lubricant, and appurtenances.

(3) Materials

(a) Pipe

PVC pressure pipe 8 inches through 12 inches in diameter shall meet the requirements of AWWA C900. PVC pressure pipe shall be Pressure Class 150 (DR18).

(b) Fittings

All fittings and accessories shall be as manufactured and supplied by the pipe supplier, unless otherwise specified. Fabricated fittings shall conform to the requirements of AWWA C900. Fabricated fittings shall have the same pressure class or pressure rating as the pipe it is used with.

(c) Joints

PVC pressure pipe and fittings shall have bell and spigot type joints with the bell being integrally formed with the pipe. The joints shall be sealed using an elastomeric gasket meeting the requirements of ASTM D3139.

(4) Construction

(a) General

Unless noted otherwise, PVC pressure pipe and fittings for gravity sanitary sewers shall be installed in accordance with this section using a sanitary sewer bedding section. The Contractor shall provide a bell hole at each joint. The bell hole shall be no larger than necessary to accomplish proper joint assembly. When the joint has been made, the void under the bell shall be filled with bedding material to provide adequate support to the pipe throughout its entire length.

(b) Joining the Pipe

Assemble all joints in accordance with recommendations of the manufacturer. Verify that the interior of the bell and the exterior of the spigot are clean and free of foreign material. Apply joint lubricant to the exterior of the spigot. The joint lubricant should extend back from the edge of the spigot 2 to 3 inches and should cover the entire circumference of the spigot. Insert the spigot into the bell and push the spigot into the bell to insertion depth reference mark.

Proper jointing may be verified by rotation of the spigot by hand or with a strap wrench. If unusual joint resistance is encountered or if the insertion mark does not reach the flush position, disassemble the joint, inspect for damage, reclean the joint components, and repeat the assembly steps. Note that fitting bells may permit less insertion depth than pipe bells.

For shorter than standard pipe lengths, field cuts may be made with either hand or mechanical saws or plastic pipe cutters. Ends shall be cut square and perpendicular to the pipe axis. Spigots shall have burrs removed and ends smoothly beveled by a mechanical beveler or by hand with a rasp or file. Field spigots shall be stop-marked with felt tip marker or wax crayon for the proper length of assembly insertion. The angle and depth of field bevels and lengths to stop-marks shall be comparable to factory pipe spigots.

(c) Lateral Connections

Lateral connections shall be made with a wye, unless otherwise noted. The wye shall be placed so the hub is at an angle of 22½ degrees or 45 degrees above the horizontal, unless otherwise noted. A wye with a 1/8 bend shall be used on shallow laterals extending horizontally from the mainline sewer. The wye for shallow laterals shall be placed so the hub is installed horizontally. The lateral hub shall be an SDR 35 gasketed bell. The hub of the wye shall have a diameter of 4 inches, unless otherwise noted.

(5) Testing

All PVC pressure pipe for gravity sewer shall be tested for deflection. PVC pressure pipe shall be tested for leakage with a low pressure air test, unless otherwise noted.

3.04 Precast Reinforced Concrete Manholes

(1) Scope

Precast reinforced concrete manholes includes all labor, materials, and equipment as necessary and required to furnish, install, and test precast reinforced concrete manholes with precast or poured-in-place concrete bases, with frame and cover, steps, and manhole chimney seal, as shown and specified.

(2) General Requirements

The Contractor shall submit manufacturer's data for the manhole, frame and covers, joint sealants, steps, adjustment rings, manhole chimney seals, pipe connectors, external manhole joint collars, and test reports on concrete strength.

(3) Materials

(a) Precast Sections

All manhole riser and cone sections, tops, precast bases, and adjustment rings shall meet the requirements of ASTM C478. A 2-inch high cylindrical extension shall be provided at the top of each cone section and reducing slab for attaching the chimney seal.

(b) Manhole Joint Sealant

Manhole joint sealant shall be a vulcanized butyl rubber strip. The joint sealant shall be a dense, stable, compressive material with a tacky outer surface. Manhole joint sealant shall be Kent Seal No. 2, joint sealant as manufactured by Hamilton Kent, Inc., Butyl-Lok as manufactured by A-Lok Products, EZ-STIK as manufactured by Press-Seal Gasket Corporation, or equal. Manhole exterior joint sealant shall be a trowelable butyl sealant that meets the requirements of ASTM C990. Trowelable butyl sealant shall be TROWELABLE EZ-STIK #3 as manufactured by Press-Seal Gasket Corporation, FM-3000 as manufactured by A-LOK Products Inc., or equal.

(c) Poured-In-Place Concrete

1. General

Concrete for poured-in-place base sections shall have a minimum 28-day compressive strength of 3000 psi. The minimum cement content shall be 5½ bags per cubic yard of concrete. The slump shall not exceed 4 inches.

2. Concrete materials shall conform to the following specifications:

a. Cement: ASTM C150, Type I or IA
b. Fine aggregate: ASTM C33
c. Course aggregate: ASTM C33 with maximum aggregate size of 1 inch
d. Water: Potable

3. Reinforcing steel used in poured-in-place concrete shall meet the requirements of ASTM A615 Grade 60.

4. Testing

The Contractor shall furnish test reports prepared by a certified testing laboratory, accepted by the Engineer, on the concrete strength. Making and storing of test specimens shall be in accordance with ASTM C31. Testing shall be in accordance with ASTM C39.

(d) Manhole Steps

Manhole steps shall be 12-inch wide steel reinforced copolymer polypropylene plastic steps meeting the requirements of ASTM C478. Steps shall be designed for a concentrated load of not less than 300 pounds. Manhole steps shall be PS1-DIS as manufactured by M.A. Industries or equal.

(e) Castings

1. General

Castings shall be Class 35B gray cast iron meeting the requirements of ASTM A48. Castings shall be free of holes, swells, cracks, and cold shuts.

2. Standard Sanitary Sewer Manhole Castings

a. Non-traffic Area

Manhole frames and covers for non-traffic areas shall be Neenah Foundry Company R-1916-F or equal having a bolt down frame with a gasketed Type "B" bolt down lid with Type "F" concealed pickholes. Bolts shall be AISI Type 304 stainless steel.

b. Traffic Area

Manhole frames and covers for traffic areas shall be Neenah Foundry Company R-1642 or equal having a machined horizontal bearing surface with a self-sealing gasketed Type "B" lid with Type "F" concealed pickholes.

(f) Internal/External Manhole Chimney Seal

The internal/external manhole chimney seal shall consist of a rubber sleeve, a compression band, butyl tape and a casting sleeve. Rubber sleeve shall be high grade rubber compound with a Durometer hardness of 50±5, a minimum tensile strength of 1500 psi, a minimum elongation of 350%, and a minimum thickness of 0.062 feet. Compression bands shall be AISI Type 304 stainless steel with a minimum thickness of 0.020 inch and a minimum width of ½ inch. Fasteners for the compression bands shall be AISI Type 304 stainless steel. Internal/external manhole chimney seal shall be as manufactured by Adaptor, Inc. or equal.

(g) External Manhole Joint Collars

External manhole joint collars shall meet the requirements of ASTM C877 , Type II. External manhole joint collars shall consist of a collar 9 to 18 inches wide with an outer layer of polyethylene, with a minimum tensile strength of 4000 psi and a minimum tear resistance of 1500 psi, and an under layer of rubberized mastic that is reinforced with a woven polypropylene fabric. Two 5/8-inch steel straps shall be located within the collar, ¾ inches from each edge. The straps shall be confined in tubes that isolate them from

the mastic and allow them to slip freely when mechanically tightened and locked around the manhole joint. The collar shall be furnished with a minimum of 6-inch overlap and a closing flap to cover any remaining exposed strap. External manhole joint collars shall be Cretex Wrap External Manhole Joint Seals, Mac Wrap as manufactured by Mar Mac Construction Products, or equal."

(h) Manhole Adjustment Rings

Manhole adjustment rings for standard manhole frames shall be precast concrete. The concrete shall contain a cement rich mixture of not less than 564 pounds per cubic yard of concrete. The mixture shall contain 6 percent (± 1.5 percent) entrained air. The minimum compressive strength shall be 5500 psi at 28 days. Adjustment rings shall have an inside diameter equal to the inside diameter of the top of cone and an outside diameter equal to the outside diameter of the manhole frame. Adjustment rings shall be not less than 2 inches nor more than 4 inches high. Adjustment rings shall have circumferential reinforcement centered within the adjustment ring with an equivalent area of not less than 0.07 square inches per vertical foot but not less than 0.024 square inches in any one adjustment ring.

(i) Pipe Connectors

Connectors for pipe shall be resilient connectors for reinforced concrete manhole structures and pipes meeting the requirements of ASTM C923. Connectors for new manholes shall be A-Lok connectors as manufactured by A-Lok Products, Inc. Connectors shall be cast integrally with the manhole. Connectors for existing manholes shall be made with a rubber boot type connector. The connector shall consist of a rubber boot, a stainless steel expansion band and a stainless steel compression band. Rubber boot connectors shall be Kor-N-Seal as manufactured by NPC, Inc., or PSX as manufactured by Press Seal Gasket Corporation.

(j) Manhole Markers

Manhole markers shall be constructed of a fiberglass reinforced plastic composite. Manhole markers shall be 4 inches wide and 6 feet long. Manhole markers shall be Curv-Flex Utility Marker (CURVFLEX-400 72 yellow with MH-668 decal applied) as manufactured by Carsonite International or equal.

(4) Construction

(a) General

Manholes and special structures shall be constructed at the location and grade shown on the plans in accordance with the details shown on the drawings. The walls of the manhole shall be plumb and true. The maximum permissible variation from plumb shall be 1/8-inch per foot of height or ½-inch in total height of the manhole measured at the vertical wall of the eccentric cone. All riser sections and top slabs shall be joined by the use of joint sealant. One continuous strip of 1-inch diameter material shall be placed on the bottom of the riser section of the manhole according to the manufacturer's recommendations prior to the placement of the upper riser sections. The top slab and cone sections shall jointed with ¾-inch diameter material. A layer of trowelable butyl rubber shall be placed around the outside of the manhole section joints.

Connections for reinforced concrete pipe shall be made with a pipe connector or by casting a pipe stub into the manhole. Connections for pipes other than reinforced concrete shall be made with pipe connectors. The annular space between the manhole excavation and the outside wall of the manhole shall be backfilled with structural backfill or bedding material to match the bedding section of the sewer.

(b) Preparation of Subgrade

All undesirable material which cannot adequately support the manhole or structure, shall be removed below the normal manhole bottom or structure base slab and replaced with structural backfill. The first 6 inches of structural backfill below the normal manhole bottom or structure base slab shall be placed and included in the cost of the manhole or structure. In the event that it becomes necessary to extend the structural backfill to a greater depth, such additional amount of backfill shall be at no cost to the district. Where distance to stable ground is excessive, the Developer's Engineer shall submit other types of foundation such as an additional poured concrete base for approval by the Engineer.

(c) Poured-in-Place Base

The concrete base shall have a minimum thickness of 10 inches below the invert of the outlet sewer. The manhole base shall substantially conform to the required shape and dimensions and the excavation shall be backformed, if necessary, to achieve this end. If excavation in stable soil has been carried below the required depth, such excess depth shall be filled with concrete. Excess concrete shall not be deposited around the manhole in such a manner that will interfere with possible future connections.

When rigid pipe is used, the pipe stubs shall be supported on brick or solid concrete blocks for the pouring of the concrete base. When flexible pipes are used, an approved flexible connection shall be cast in place. The precast manhole bottom riser section shall be set on concrete brick or block so that the bottom of the section is below the spring line of the outlet pipe, set for proper location and plumbed. The manhole base shall then be poured.

(d) Precast Manhole with Integral Base

The excavation shall be deep enough so that after the bottom manhole barrel section with integral base has been placed thereon, set to grade and plumbed, there remains a 6-inch minimum depth of bedding material below the bottom of the base. The bench shall not be poured and the channel shall not be formed until the manhole is completely built and backfilled when pipe connectors are used. The bench and channel shall be precast with the base when reinforced concrete pipe stubs are used.

(e) Manhole Channel

The channel of a manhole for sewers shall be the same diameter as the larger of the adjoining sewers. The channel shall be smooth and carefully shaped in the field to eliminate ponding. The lower portion of the channel shall conform to the shape of the pipe and the upper portion shall rise vertically to a point 1-inch above the crown of the pipe.

When a pipe connection is made to an existing manhole, the manhole channel shall be reconstructed as required by the Engineer. The manhole channel shall provide a smooth and uniform channel to eliminate ponding. The lower portion of the channel shall conform to the shape of the pipe and the upper portion shall rise vertically to a point 1-inch above the crown of the pipe.

(f) Adjustment Rings

A minimum of two adjustment rings shall be provided below each casting. The adjustment rings shall be set in a bed of fresh mortar extending the full width of and continuously around the top of the cone section or adjustment ring. The adjustment rings shall be aligned with the inner and outer surfaces of the cone section. The inner joints of the adjustment rings shall have a concave tool finish. A layer of trowelable butyl rubber shall be placed around the entire exterior chimney portion of the manhole after the adjustment ring mortar has set.

(g) Frame and Cover

The manhole frame shall be centered on the adjustment rings and brought to grade. The manhole castings located in traffic areas shall be brought to finished grade of the roadway prior to placing the binder course. A temporary asphalt ramp shall be provided around the sanitary sewer manhole from the top of the casting to the binder course. The ramp shall be sloped to provide protection to the manhole until the surface course is constructed. The ramp shall be a minimum diameter of 10 feet around the frame. The ramp shall be removed prior to placement of the surface course. The surface course shall be constructed to the top of the manhole casting. The manhole covers in non-traffic areas shall be bolted to the frame after final manhole inspection. The manhole cover bolts shall be coated with an anti-seize lubricant prior to installation.

(h) Steps

Manhole steps shall be installed, unless otherwise specified, in all manholes in excess of 4 feet deep, and shall be aligned so as to form a continuous ladder with steps equally spaced vertically in the completed manhole at a design distance of 16 inches on center. The step shall project a minimum clear distance of 4 inches from the wall of the riser or cone section measured from the point of embedment. The steps shall be placed as required with an allowable tolerance of ± 1 inch.

(i) Connection for Future Sewers

Where indicated on the plans, manholes shall include connection pipe for future sewers, building sewers, or drains. The connection pipe shall be of the same type as specified for the sewer through the manhole and shall terminate in a bell, grooved, or other type end having the same type of joint as provided on the sewer being constructed. The connection pipe shall be carefully set to the line and grade indicated on the plan using a drop structure if necessary.

If no elevation is shown for the connection pipe, it shall be set such that the crowns are at equal elevations and channeled in the direction of flow. Unused connection pipe shall be capped or plugged.

Connection pipes longer than 5 feet shall have a sewer pipe marker. The sewer pipe marker shall be located at the end of the connection pipe. The sewer pipe marker shall include a 2 x 4 stake and a 2-foot long metal rod. The 2 x 4 stake shall extend from the invert of the connection pipe to 2 feet above grade. The 2-foot long metal rod shall be provided vertically next to the 2 x 4 stake and shall terminate 6 inches below grade. The 2 x 4 stake shall extend from the invert of the connection pipe to 2 feet below grade for connection pipes ending under a paved area. The 2-foot long metal rod shall terminate 2 feet below grade for connection pipes ending under a paved area.

(j) External Manhole Joint Collar

An external manhole joint collar shall be provided on each sanitary sewer manhole section joint. The external manhole joint collar shall be installed in accordance with the manufacturer's recommendation.

(k) Internal/External Manhole Chimney Seal

An internal/external manhole chimney seal shall be provided on each manhole unless otherwise specified. The manhole chimney seal shall cover and seal the entire exterior chimney portion of the manhole. The seal shall be installed prior to backfilling around the cone of the manhole. The seal shall be installed in accordance with the manufacturer's recommendations after the trowelable butyl rubber has set. The Contractor shall carefully backfill around the seal without damaging the seal.

(l) Manhole Marker

Two manhole markers shall be provided for each manhole located in an access pad. One manhole marker shall be installed on each side of the access pad at each manhole location. The manhole markers shall be located outside the access pad and within 2 feet from the edge of the access pad.

One manhole marker shall be provided for each manhole not located in the pavement or shoulder of roadways when no access pad is required. The manhole marker shall be installed within 2 feet of the manhole when no access pad is provided.

(5) Testing

Manholes for sanitary sewers shall be tested by a vacuum test. Vacuum test shall be performed in accordance with ASTM C1244. A vacuum of 10 in. of mercury shall be drawn on the manhole, the valve on the vacuum line of the test head closed, and the vacuum pump shut off. The time shall be measured for the vacuum to drop to 9 in. of mercury. The manhole shall pass if the time for the vacuum reading to drop from 10 in. of mercury to 9 in. of mercury meets or exceeds the value indicated in Table 1. If the manhole fails the initial test, necessary repairs shall be made by a method approved by the Engineer. The manhole shall then be retested until a satisfactory test is obtained. There shall be no visible leakage into the manhole at any location.

Table 1 Minimum Test Times for 4 Foot Diameter Manholes

Depth, ft.	Time, sec.	Depth, ft.	Time, sec.
8	20	20	50
10	25	22	55
12	30	24	59
14	35	26	64
16	40	28	69
18	45	30	74

3.05 Polyvinyl Chloride (PVC) Sewer Lateral Pipe and Fittings

(1) Scope

Polyvinyl chloride (PVC) sewer lateral pipe and fittings includes all labor, materials, and equipment as necessary and required to furnish, install, and test 4-inch and 6-inch diameter sewer lateral pipe and fittings, as shown and specified.

(2) General Requirements

The Contractor shall submit manufacturer's data for the pipe, fittings, cement, and appurtenances.

(3) Materials

(a) Pipe and Fittings

PVC 4-inch and 6-inch diameter sewer lateral pipe and fittings may have solvent weld joints or rubber gasket joints, unless noted otherwise. All fittings and accessories shall be supplied by the pipe manufacturer, unless otherwise noted. All fittings and accessories shall be the same strength and material as the pipe.

PVC sewer lateral pipe and fittings with solvent weld joints shall meet the requirements of ASTM D2665. PVC sewer lateral fittings with solvent weld joints shall meet the requirements of ASTM D3311. PVC sewer lateral pipe and fittings with solvent weld joints shall be Sch. 40 DWV pipe and fittings.

PVC sewer lateral pipe and fittings with rubber gasket joints shall meet the requirements of ASTM D3034. PVC sewer lateral pipe and fittings with rubber gasket joints shall have a standard dimension ratio (SDR) of 35, unless otherwise noted.

(b) Joints

PVC sewer lateral pipe and fittings with solvent weld joints shall have hub and spigot joints meeting the requirements of ASTM D2665. The hub and spigot ends shall be integrally formed with the pipe or fitting. Primer for solvent weld joints shall meet the requirements of ASTM F656. Cement for solvent weld joints shall meet the requirements of ASTM D2564.

PVC sewer lateral pipe and fittings with rubber gasket joints shall have bell and spigot joints meeting the requirements of ASTM D3212. The bell and spigot ends shall be integrally formed with the pipe for fitting. Rubber gaskets shall meet the requirements of ASTM F477. Rubber gasket lubricant shall be made to be used with PVC pipe and fittings.

(c) Sewer Lateral Saddles

Sewer lateral saddles shall have a cast iron body with a rubber tubular flange gasket. The strap, bolts, nuts, and washers shall be AISI Type 304 stainless steel. The strap shall be 2½ inches wide. The sewer lateral saddle shall be a "tee" or "wye" type saddle. The inlet pipe shall be a bell to accept a SDR 35 spigot. Sewer lateral saddles shall have an alignment flange. Sewer lateral saddles shall be correctly contoured to fit the type and size of the sanitary sewer pipe. The sewer lateral saddle shall be sealtite "UH" or "EH" as manufactured by Geneco or equal.

(4) Construction

(a) General

PVC sewer lateral pipe and fittings shall be installed in accordance with this section using a sanitary sewer bedding section unless noted otherwise. Sewer lateral saddles shall only be used for connecting new sanitary sewer laterals to existing sanitary sewer pipe. The Contractor shall provide a hub hole at each joint. The hub hole shall be no larger than necessary to accomplish proper joint assembly. When the joint has been made, the void under the hub shall be filled with bedding material to provide adequate support to the pipe throughout its entire length.

(b) Joining the Pipe

1. Solvent Weld Joints

Assemble all joints in accordance with the recommendations of the manufacturer. For shorter than standard pipe lengths, field cuts may be made with either hand or mechanical saws. Ends shall be cut square and perpendicular to the pipe axis. Spigots shall have burrs removed. Clean and dry the hub and spigot. Field spigots shall be stop-marked with felt tip marker or wax crayon for the proper length of assembly insertion. The length to the stop-mark shall be comparable to factory pipe spigots. Dry test the fit of the joint. Apply primer to the socket of the fitting and apply primer to the spigot equal to the depth of the socket. Primer must be applied in sufficient quantities to soften the surface of the socket and spigot. Apply an even coat of solvent cement to the spigot and apply an even coat to the socket. Cement must be applied in sufficient quantities to fill the joint. Immediately assemble the joint while the cement is fluid. Insert the spigot until it contacts the bottom of the socket. Give the pipe a quarter turn and hold the joint together until the cement sets. Remove excess cement from the exterior of the joint.

2. Rubber Gasket Joints

Assemble all joints in accordance with recommendations of the manufacturer. Verify that the interior of the bell and the exterior of the spigot are clean and free of foreign material. Apply joint lubricant to the exterior of the spigot. The joint lubricant should extend back from the edge of the spigot 2 to 3 inches and should cover the entire circumference of the spigot. Insert the spigot into the bell and push the spigot into the bell to insertion depth reference mark. Proper jointing may be verified by rotation of the spigot by hand or with a strap wrench. If unusual joint resistance is encountered or if the insertion mark does not reach the reference mark, disassemble the joint, inspect for damage, reclean the joint components, and repeat the assembly steps. Note that fitting bells may permit less insertion depth than pipe bells.

For shorter than standard pipe lengths, field cuts may be made with either hand or mechanical saws or plastic pipe cutters. Ends shall be cut square and perpendicular to the pipe axis. Spigots shall have burrs removed and ends smoothly beveled by a mechanical beveler or by hand with a rasp or file. Field spigots shall be stop-marked with felt tip marker or wax crayon for the proper length of assembly insertion. The angle and depth of field bevels and lengths to stop-marks shall be comparable to factory pipe spigots.

(c) Sewer Lateral Connections

Sewer laterals with solvent weld joints shall be connected to new sanitary sewer pipeline tees or wyes with a PVC adaptor fitting. The adaptor fitting shall have a SDR 35 spigot and a Sch. 40 DWV solvent weld hub. Sewer laterals with rubber gasket joints shall be connected directly to the new sanitary sewer pipeline tees or wyes.

(d) Laterals installed by Boring

PVC sewer laterals shall be installed by boring where required or permitted by the Engineer. The location of the boring and access pits shall be as close as possible without disturbing the surface to be bored under. The Contractor shall use any method of boring that is suitable for the soil conditions. The outside diameter of the boring devices shall be as close to the outside diameter of the sewer lateral as possible. The Contractor shall make every effort to minimize the size of the hole and minimize loss of soil outside the hole. Once the jacking operation has started it shall be continued uninterrupted until the sewer lateral is installed. All significant voids shall be packed with a sand-cement slurry.

(e) Lateral Reconnections

Sanitary sewer lateral reconnections shall consist of a wye or tee, sewer lateral pipe, and transition coupling. Unless otherwise noted, the minimum size of sanitary sewer laterals shall be 4 inches in diameter. The Contractor shall cut the existing lateral and shall install a transition coupling to provide a watertight joint between the new lateral and the existing lateral. The transition coupling shall be installed according to the manufacturer's recommendations and shall be encased in bedding concrete.

(f) Lateral Connections to Existing Pipe

Sewer lateral connections to existing sanitary sewer pipelines shall be made with a service saddle. The service saddle shall be placed so the hub is at an angle of 22½ degrees or 45 degrees above the horizontal, unless otherwise noted. A line shall be scribed onto the sanitary sewer pipe marking the hole to be cut. The pipe shall be cut using a keyhole saw or a saber saw. The coupon along with any other debris that may have fallen into the pipe shall be removed. The service saddle shall be installed and bolts tightened without deflecting the sewer pipe. Service saddles shall be infiltration free after installation. Service saddles shall be located a minimum of 2 feet from any pipe or fitting joint and shall have a minimum of 5 feet between service saddles.

(g) Sewer Lateral Marker

The sewer lateral shall be extended to within 1-foot of the property line or the edge of the easement, unless otherwise noted. The end of the sewer lateral shall be marked with a 6-foot long 2 x 4 stake and a 3-foot long No. 4 reinforcing bar. The top of the 2 x 4 stake shall extend 12 to 24 inches above grade. The top of the reinforcing bar shall be 6 inches below grade. The top of the 2 x 4 stake shall be painted green.

(5) Testing

PVC pipe and fittings used for sanitary sewer laterals shall be tested for leakage by the low pressure air test, unless specified otherwise. PVC pipe and fittings used for sanitary sewer lateral reconnections shall be televised to identify any visible leakage, unless specified otherwise. All leaks shall be repaired in a manner acceptable to the Engineer.

PVC pipe and fittings used for lateral connections to existing pipelines shall be low pressure air tested prior to connection to the mainline. Alternatively, the sanitary laterals may be televised after the trench is backfilled and the groundwater has returned to the original elevation.

3.06 Gravity Sewer Deflection Testing

(1) Scope

Gravity sewer deflection testing includes all labor, materials, and equipment as required or necessary to perform deflection tests on PVC gravity sewers, as shown and specified.

(2) General Requirements

After completion of the sewer, including backfilling and compaction, the Contractor shall conduct a deflection test. The test shall be performed not less than 30 days after the pipeline segment was backfilled. The section of sewer line to be tested shall be flushed and cleaned prior to the test. The District may require testing of manhole-to-manhole sections as they are completed, in order to expedite the acceptance of the sewer and allow connections before the sewer system is complete. Should any test section fail to meet the requirements of the test, the Contractor shall immediately make the necessary repairs at his own expense. All testing shall be performed under the observation of the Engineer.

(3) Deflection Test

The deflection test shall be conducted with an approved go-no-go acceptance testing device. This device shall be a rigidly constructed cylinder, or other approved shape, which will not change shape or size when subjected to forces exerted on it by the pipe wall.

The diameter of the testing device shall not be less than 95 percent of one of the following quantities, whichever gives the smaller diameter:

(a) The average outside diameter of the pipe minus the tolerance on the average diameter, minus two times 110 percent of the minimum wall thickness. The required dimensions of the testing device for 8-inch through 15-inch diameter PVC pipe are shown on Table 1.

Table 1

DEFLECTION TESTING DEVICE DIMENSION FOR PVC PIPE

Nominal Pipe Diameter (inches)	SDR 35 Minimum Diameter (inches)	SDR 26 Minimum Diameter (inches)
8	7.28	7.11
10	9.08	8.87
12	10.79	10.55
15	13.20	12.90

(b) The actual inside diameter of the pipe to be installed as determined by pipe test reports.

For acceptance, the device must pass through the entire section between manholes or other structures in one pass when pulled by hand without the use of excessive force. The contractor has the option of testing any section of line failing the go-no-go test with an approved deflection measuring device. If the normal deflection does not exceed 5 percent, that section of line tested will be accepted.

3.07 Gravity Sewer Leakage Testing

(1) Scope

Gravity sewer leakage testing includes all labor, materials, and equipment as required or necessary to perform leakage tests on gravity sewers, as shown and specified.

(2) General Requirements

After completion of the sewer, including backfilling and compaction, the Contractor shall test each section of gravity sewer. The section of sewer line to be tested shall be flushed and cleaned prior to the test. The District may require testing of manhole-to-manhole sections as they are completed, in order to expedite the acceptance of the sewer and allow connections before the sewer system is complete. Should any test section fail to meet the requirements of the test, the Contractor shall immediately make the necessary repairs at his own expense. All testing shall be performed under the observation of the Engineer.

(3) Leakage Tests

(a) Infiltration Test

The infiltration test shall be used when groundwater is at a level at least two feet above the pipe during the test measurement. The groundwater level at each manhole on the section being tested shall be determined by the Contractor providing a $^{3}/_{8}$-inch inside diameter pipe through each manhole at an elevation near the invert. Aggregate shall be placed on the outside of the pipe to prevent clogging. The end of the pipe on the inside of the manhole shall contain fittings, together with a vertical transparent pipe, to determine the groundwater level. The pipe through the manhole shall be permanently sealed after the tests have been completed.

To determine the amount of infiltration, the Contractor shall furnish, install, and maintain a V-notch sharp crested weir in a wood frame tightly secured and sealed at the low end of each sewer branch and at locations on the main sewers accepted by the Engineer. Maximum allowable infiltration rate shall be 200 gallons per mile per inch of diameter of sewer per 24-hour day. The maximum infiltration rate for sewers shall be as shown in Table 1.

Table 1

Diameter of Sewer (Inches)	Infiltration or Exfiltration Per Foot, Per Hour (Gallons)
4	0.0063
6	0.0095
8	0.0126
10	0.0158
12	0.0190
15	0.0237

The joints shall be tight and visible leakage in the joints or leakage in excess of that specified above shall be repaired at the Contractor's expense by a method accepted by the Engineer. When infiltration is demonstrated to be within the allowable limits, the Contractor shall remove such weirs, materials, and other equipment used for the leakage test.

(b) Exfiltration Test

The exfiltration test may be used when the groundwater is not at least two feet above the pipe during the test period. The Contractor shall provide all necessary materials, equipment, and water, required to perform an exfiltration test as hereinafter described before the sewer is accepted. The maximum allowable exfiltration rate shall be 200 gallons per mile per inch of diameter of sewer per 24-hour day. The maximum exfiltration rate for sewers shall be as shown in Table 1. The joints shall be tight and leakage in excess of that specified above shall be repaired by a method accepted by the Engineer.

The hydrostatic head for test purpose shall be seven feet above the sewer crown at the upstream end. To determine the amount of exfiltration, the Contractor shall fill the pipe and provide an accurate means of measurement on the volume of water required to bring the water level back to its original level at the end of the test period. The duration of the test period shall be two hours. The sewer test section may be filled two hours prior to the time of the exfiltration testing to permit normal absorption into the sewer walls to take place.

(c) Low Pressure Air Test

The low pressure air test may be used in place of the infiltration or exfiltration test for sewers with diameters of 15 inches or less when the groundwater is less than 10 feet above the lowest point of the sewer. Air testing shall be performed in accordance with Uni-Bell UNI-B-6-85 "Recommended Practice for Low Pressure Air Testing of Installed Sewer Pipe for PVC Pipe" and these specifications. The pipe shall be tested between adjacent manholes. The line to be tested shall be isolated by means of inflatable plugs. One plug shall have an inlet tap for connecting the air supply. If the test section is below groundwater level, the Contractor shall determine the height of groundwater above the spring line of the pipe at each end of the test section and compute the average. For every foot of groundwater above the pipe spring line, increase the gage pressure by 0.43 pounds per square inch up to a maximum pressure of 9.0 psig for PVC pipe.

Air shall be introduced slowly into the test section of pipe until the pipe pressure is 4.0 psig greater than the average back pressure of the groundwater over the pipe. After the pressure has been obtained, it shall be maintained for at least two minutes to allow the air temperature within the pipe section to stabilize and to allow for inspection of plugs to be completed. After the two minute stabilization period, the air pressure shall be regulated to a pressure of 3.5 psig. A stopwatch shall be used to time the interval required for the test pressure to drop from 3.5 psig to 2.5 psig. The section of the line being tested shall be acceptable if the time in minutes for the air test from 3.5 psig to 2.5 psig is greater than the time shown in Table 2. Required test times for various sizes and lengths of sewers are shown in Table 3.

Table 2

Pipe Diameter, inches	Minimum Time, min:sec.	Length for Minimum Time, feet	Time for Longer Length, sec.
4	3:46	597	.380 L
6	5:40	398	.854 L
8	7:34	298	1.520 L
10	9:26	239	2.374 L
12	11:20	199	3.418 L
15	14:10	159	5.342 L

Table 3

Pipe Diameter,	Specification Time for Length (L) Shown (min:sec)							
inches	100 ft	150 ft	200 ft	250 ft	300 ft	350 ft	400 ft	450 ft
4	3:46	3:46	3:46	3:46	3:46	3:46	3:46	3:46
6	5:40	5:40	5:40	5:40	5:40	5:40	5:42	6:24
8	7:34	7:34	7:34	7:34	7:36	8:52	10:08	11:24
10	9:26	9:26	9:26	9:53	11:52	13:51	15:49	17:48
12	11:20	11:20	11:24	14:15	17:05	19:56	22:47	25:38
15	14:10	14:10	17:48	22:15	26:42	31:09	35:36	40:04

3.08 Gravity Sewer Televising

(1) Scope

Gravity sewer televising includes all labor, material, equipment, and services necessary to televise and record the condition of the interior surface of the gravity sewer pipeline as shown and specified.

(2) General Requirements

(a) General

All new gravity sanitary sewers shall be cleaned and televised. Whenever a connection is completed to an existing gravity sanitary sewer, the complete length between manholes shall be cleaned and televised. Televising shall be performed from either the downstream manhole to the upstream manhole or the upstream manhole to the downstream manhole of each sewer segment, unless otherwise noted. All televising work shall be performed in the presence of the Engineer, unless noted otherwise. Any defects in the gravity sanitary sewer that was repaired after the initial televising shall be retelevised to determine acceptability of the repair. The Contractor shall provide a minimum of five days notice to the Engineer before the televising work is started.

(b) Submittals

The Contractor shall submit product information on all equipment used for televising and cleaning under this specification. The Contractor shall submit verification that employees performing the televising have been trained in a Pipe Assessment Certification Program (PACP).

(3) Equipment

(a) Cleaning Equipment

All high-velocity sewer cleaning equipment shall be constructed for ease and safety of operation. The equipment shall have a selection of two or more high-velocity nozzles. The nozzles shall be capable of producing a scouring action from 15 to 45 degrees in all size lines designated to be cleaned. Equipment shall also include a high-velocity gun for washing and scouring manhole walls and floor. The gun shall be capable of producing flows from a fine spray to a solid stream. The equipment shall carry its own water tank, auxiliary engines, pumps, and hydraulically driven hose reel.

(b) Televising Equipment

1. Mobile TV Studio

The Contractor shall provide a mobile studio, from which a skilled technician can control movement of the television camera from above the ground. The view seen by the television camera shall be transmitted to a monitor located inside the TV studio. The mobile TV studio shall be capable of producing a digital video disk (DVD).

The Contractor's mobile studio shall be large enough to accommodate up to three people for the purpose of viewing the monitor while the inspection is in progress. The Engineer shall have access to view the television screen at all times.

2. Televising Camera

The television camera used for the inspection shall be one specifically designed and constructed for sewer inspection. Lighting for the camera shall be suitable to allow a clear picture of the entire periphery of the pipe. The camera shall be operative in 100 percent humidity conditions. The camera, television monitor, and other components of the video system shall be capable of producing a high quality color picture that is satisfactory to the Engineer. The camera shall be a remotely operated pan and tilt type. The rotating camera and light head configuration shall provide 240 degrees of pan and tilt angle measuring centerline to centerline and 70 degree lens viewing angle.

A high intensity lighting system shall be used to provide the proper illumination to inspect down the pipes; along the pipe crown, invert, and sidewalls; and laterals while using the camera. The lighting system shall be designed for inspection of connections, pipe walls, and pipe joints at a distance of five feet. The lighting shall provide a clear, bright, and focused view on the televising DVD provided to the District.

3. DVD

The DVD shall be "read only" format and shall contain video and audio. The system shall provide digital photographs of all defects observed.

4. Communication Equipment

Suitable means of communication shall be provided between the mobile TV studio and winching equipment.

(4) Inspection

(a) General

The sewer cleaning and televising work shall be performed within two weeks of the completion of sewer installation. The Contractor shall notify property owners of homes connected to existing sanitary sewers to be cleaned and televised in writing one week prior to commencing the work. The sewer cleaning and televising work shall be performed so that any pipeline defects are clearly visible. The sewer cleaning and televising shall be repeated, if, in the opinion of the Engineer, the pipeline was not adequately cleaned to view potential defects in the pipeline during the televising operation. The cost of repeating the cleaning and televising work shall be at the expense of the Contractor.

(b) Cleaning

Prior to any televising, dirt, grease, rocks, sand, and other foreign materials and obstructions shall be cleaned from the sewer lines by a high velocity jet. The cleaning operation shall remove all dirt, debris, and grease in the pipeline so that any pipe defect would be clearly visible. If cleaning of an entire section cannot be successfully performed from one manhole, the equipment shall be set up on the other manhole and cleaning attempted again. Any other means of cleaning shall not be done unless written permission is obtained from the Engineer.

All sludge, dirt, sand, rocks, grease, and other solid or semisolid material resulting from the cleaning operation shall be removed at the downstream manhole of the section being cleaned. Passing material from manhole section to manhole section will not be permitted.

(c) Televising

After cleaning, the sewer sections shall be visually inspected by means of closed--circuit television. The inspection shall be done one sewer section at a time. The flow in the sewer section shall be no greater than 30 percent of sewer diameter, as measured in the upstream manhole. If flows are greater than 30 percent of the sewer diameter, the Contractor shall televise during low flow periods of the day. Low flows normally occur between 10:00 p.m. and 6:00 a.m. If flows increase to over 30 percent of the sewer diameter during low flow televising, the Contractor may televise until flows increase to over 40 percent of the sewer diameter.

The camera shall be moved through the line in either direction at a moderate rate, stopping at each joint, interconnection, and when necessary to permit proper documentation of the sewer's condition. The camera shall be stopped at flowing laterals for a minimum of 3 minutes. The camera shall be stopped at all laterals and pipeline cracks and the periphery of the sewer shall be slowly panned with the camera. In no case will the television camera be pulled at a speed greater than 30 feet per minute. Manual winches, power winches, TV cable, and powered rewinds or other devices that do not obstruct the camera view or interfere with proper documentation of the sewer conditions shall be used to move the camera through the sewer line. If the televising camera cannot pass through the entire sewer segment, the Contractor shall set up his equipment so the inspection can be performed from the opposite manhole.

All sewer segments televised shall be recorded on a DVD. Audio shall be included on the DVD informing the viewer of the location of the sewer section being recorded, and a description of all problem or defective areas.

Lineal foot location shall be shown on the television and recorded on the DVD. Lineal footage shall start and end from the center of each manhole.

(d) Photographs

Photographs shall be taken by the Contractor of all problem or defective areas, and of areas requested by the Engineer.

(5) Final Report and DVD

The Contractor shall furnish two typewritten or computer generated bound copies of the final report. The report shall include log sheets indicating client, location, manhole number, manhole depth, sewer material type and size, location of all interconnections, location and description of all pipe defects and structural failures, location and flow rate in gallons per minute of any infiltration, photos as required, DVD reference tab and index as needed, a brief statement as to condition and characteristic of the sewer televised, and summary tables of all sewer and manhole defects, failures, and infiltration. An index shall be included in the report indicating the DVD number and referencing the sewer pipeline location between manholes, street location, and the tab designation.

The Contractor shall furnish, with the final report, two copies of the DVDs generated during the televising program. The final report and DVDs shall be submitted to the Engineer within two weeks of completing the televising work.

3.09 Polyvinyl Chloride (PVC) Pressure Sewer Pipe and Fittings

(1) Scope

Polyvinyl chloride (PVC) pressure sewer pipe and fittings include all labor, materials, and equipment as necessary and required to furnish, install, and test 1¼-inch to 2-inch PVC pressure pipe and fittings, as shown and specified.

(2) General Requirements

The Contractor shall submit manufacturer's data for the pipe, fittings, cement, and appurtenances.

(3) Materials

(a) Pipe and Fittings

PVC 1¼-inch through 2-inch diameter pressure pipe shall meet the requirements of ASTM D1785. PVC pressure pipe shall be Sch. 40 PVC pipe unless otherwise noted. Sch. 40 PVC pressure pipe fittings shall meet the requirements of ASTM D2466. All fittings and accessories shall be the same strength and material as the pipe.

(b) Joints

PVC 1¼-inch through 2-inch diameter pressure pipe and fittings shall have hub and spigot ends for solvent weld joints. PVC pressure pipe joints shall meet the requirements of ASTM D2672. PVC pressure pipe fitting joints shall meet the requirements of ASTM D2466. The hub and spigot ends shall be integrally formed with the pipe or fitting. Primer for solvent weld joints shall meet the requirements of ASTM F656. Cement for solvent weld joints shall meet the requirements of ASTM D2564.

(c) Curb Stops

Curb stops for 1¼-inch pressure sewers shall be Minneapolis pattern curb stops with inverted plug valves. Curb stops shall have NPT inlets and outlets. Curb stops for 1¼-inch pressure sewer shall be A.Y. McDonald 3081. Curb stops for 1½-inch and 2-inch pressure sewers shall be Minneapolis pattern curb stops with ball valves. Curb stops shall have NPT inlets and outlets. Curb stops for 1½-inch and 2-inch pressure sewer shall be A.Y. McDonald 6105.

(d) Curb Boxes

Curb boxes for curb stops shall have a Minneapolis pattern base, 1½-inch minimum upper section, 48-inch long stationary rod, and a lid with 1½-inch minimum pentagon plug. Increasing adaptors shall be used for 1¼-inch curb stops. Curb box shall have an extended length of 7'-6" and shall have 12 inches of adjustment. Curb boxes shall be A.Y. McDonald 5623. Lids shall be A.Y. McDonald 5623L. Lids shall have "SAN" or "SEWER" cast into the lid. Increasing adaptors shall be A.Y. McDonald 5623A.

(e) Flushing Connections

PVC pressure pipe and fittings for flushing connections shall be Sch. 80, unless noted otherwise. PVC pressure pipe for flushing connections shall meet the requirements of ASTM D1785. PVC fittings for flushing connections shall meet the requirements of ASTM D2467.

Quick couplings for flushing connections shall consist of a 3-inch threaded male NPT aluminum 30F adapter with a 30V dust cap. Quick couplings shall be as manufactured by PT Coupling Company, Inc.

Cast iron frame and cover for flushing connection risers shall be a standard manhole casting. Cast iron frame and cover for flushing connection curb stop and box shall be a Neenah Foundry Company R-1970 casting.

(f) Stainless Steel Nipples

Stainless steel nipples shall be Sch. 40 AISI Type 304 or 316 threaded pipe meeting the requirements of ASTM A312 or ASTM A778. Nipples shall have NPT standard threads.

(4) Construction

(a) General Requirements

Unless otherwise noted, PVC pressure pipe and fittings shall be installed in accordance with this section using a pressure sewer bedding section, unless noted otherwise. The minimum size of pressure sewer laterals shall be 1¼ inches, unless otherwise noted. The minimum size of pressure sewers shall be 2 inches, unless otherwise noted. The curb stop shall be the same size as the pipe. Joints to threaded fittings and valves shall be made with a socket by NPT adaptor. PVC pipe shall not be threaded.

(b) Joining Pipe

Assemble all joints in accordance with the recommendations of the manufacturer. For shorter than standard pipe lengths, field cuts may be made with either hand or mechanical saws. Ends shall be cut square and perpendicular to the pipe axis. Spigots shall have burrs removed. Clean and dry the hub and spigot. Dry test the fit of the joint. Apply primer to the socket of the fitting and apply primer to the spigot equal to the depth of the socket. Primer must be applied in sufficient quantities to soften the surface of the socket and spigot. Apply an even coat of solvent cement to the spigot and apply an even coat to the socket. Cement must be applied in sufficient quantities to fill the joint. Immediately assemble the joint while the cement is fluid. Insert the spigot until it contacts the bottom of the socket. Give the pipe a quarter turn and hold the joint together until the cement sets. Remove excess cement from the exterior of the joint.

(5) Testing

All pipelines and appurtenances shall be tested by a hydrostatic test composed of a pressure test and a leakage test.

3.10 Pressure Sewer Pipeline Testing

(1) Scope

Pressure sewer pipeline testing includes all labor, equipment, and material as required or necessary to hydrostatically test pressure sewer pipelines as shown and specified.

(2) General Requirements

(a) Test Pressure

All pressure sewers shall be tested by the Contractor, and shall successfully pass a hydrostatic test composed of a pressure test and a leakage test. Test pressures shall be 50 psi for the pressure test and 40 psi for the leakage test, unless noted otherwise.

(b) Submittals

The Contractor shall submit three copies of the results of all hydrostatic tests.

(3) Procedure

Pipelines shall have a pressure test followed by a leakage test. If it is found unnecessary to add water to maintain pressure during the duration of the pressure test, the leakage test may, with the approval of the Engineer, be waived.

(a) Pressure Test

After the test connections are made and the pipeline is filled with water, the test section shall be subjected to the normal pressure. After examination of exposed parts of the system, the pressure will be increased to the test pressure. The pipeline shall be examined and if any defects are found, the Contractor shall immediately make the necessary repairs at his own expense. The pressure test shall be repeated until no defects can be found. The duration of the final pressure test shall be two hours.

(b) Leakage Test

The leakage test shall be conducted after satisfactory completion of the pressure test. The test section shall be subjected to leakage test pressure. Leakage is defined as the quantity of water to be supplied into the newly laid pipe, or any valved section of it, necessary to maintain the specified leakage test pressure after the pressure sewer has been filled with water and the air expelled.

Leakage for buried pressure sewer pipe with rubber gasket joints shall not exceed the number of gallons per hour as determined by the following formula:

$$GPH = ND(P)^{1/2}/7400$$

GPH -- gallons per hour
N -- number of joints under test
D -- nominal diameter of main in inches
P -- average pressure in pounds per square inch gauge during leakage test

In case the section under test contains joints of various diameter, the allowable leakage will be the sum computed leakage for each size of joint. Leakage for buried pressure sewer pipelines with solvent weld joints shall be zero during the duration of the test. Leakage for all exposed pressure piping shall be zero throughout the duration of the test.

Should any test section fail to meet the leakage test, the Contractor shall immediately make the necessary repairs at his own expense. The duration of the final leakage test shall be two continuous hours.

SECTION 4

WATER MAIN

4.01 General Requirements for Water Main Construction

(1) Scope

General requirements for water main construction includes all labor, materials, and equipment necessary to construct water mains and appurtenances, as shown and specified.

(2) General Requirements

The Contractor shall submit manufacturer's data for joint restraint systems, couplings and sleeves, restrained joints, bolts and nuts for mechanical and flanged joints, mastic coating and insulation.

(3) Materials

(a) Thrust Blocking

Thrust blocks shall be constructed of concrete having a minimum 28-day compressive strength of 2000 psi. The minimum cement content shall be 4½ bags of cement per cubic yard of concrete. The allowable slump shall be 4 to 5 inches. The bearing area of the thrust blocking shall be as shown on the drawings or as required by the Developer's Engineer.

(b) Metal Harness Systems

Metal harness systems shall, as a minimum, consist of two ¾-inch diameter steel rods mounted 180 degrees apart with the appropriate clamps or attachment bolts. The metal harness system shall be sized to restrain the thrust generated by the test pressure of the pipeline with a factor of safety of 4. The Contractor shall submit complete details for all metal harness applications. Metal harness systems shall be Super Star Tiebolt Joint Restrainers as manufactured by Star National Products, or equal.

(c) Joint Restraint Systems

Joint restraint systems shall, as a minimum, be designed to restrain the pipe or fitting when subjected to the full pressure rating of the pipe or fitting with a factor of safety of 2.

1. Mechanical Joint Restraint Systems

Joint restraint for mechanical joints shall be provided by wedge action retainer gland. Gland and wedges shall be ASTM A536 ductile iron. Wedge action restrainer glands for PVC pipe shall be Uni-Flange Series 1500, or EBAA Iron Series 2000 PV or Series 3000. Wedge action restrainer glands for ductile iron pipe shall be Uni-Flange Series 1400, or EBAA Iron Series 1100 or Series 3000.

2. Push-on Joint Restraint Systems

Joint restraint for push-on pipe joints shall be provided by a harness system consisting of a restraint ring, retaining ring, and connecting rods. Restraint ring and retaining ring shall be ASTM A536 ductile iron. Connecting rods shall be high strength, low alloy steel conforming to the requirements of AWWA C111 (ANSI A21.11). Harness systems for PVC pipe shall be Uni-Flange Series 1350 or Series 1390, or EBAA Iron Series 1600, Series 2800, or Series 3000. Harness systems for ductile iron pipe shall be Uni-Flange Series 1450, or EBAA Iron Series 1100HD or Series 3600.

(d) Mastic Coating

Mastic coating shall be a one-part solvent drying thixotropic coal tar coating with inert resins and fillers. Mastic coating shall be TC Mastic as manufactured by The Tape Coat Company or equal.

(e) Couplings and Sleeves

1. Mechanical Pipe Couplings

Mechanical pipe couplings for joining pipe of the same outside diameter shall be Dresser Style 253 or Smith-Blair Type 441 for pipes 16-inch diameter and smaller and Dresser Style 38 or Smith-Blair Type 411 for pipes larger than 16-inch diameter. Mechanical pipe couplings for joining pipe of different material or outside diameter shall be Dresser Style 162, or Style 62, Smith-Blair Type 441 or Type 413, or equal. Bolts, nuts, and gaskets shall be furnished by the coupling manufacturer. Gaskets shall be suitable for the intended service.

2. Sleeves

Sleeves shall be ductile iron with mechanical joint ends and shall meet the requirements of AWWA C110 (ANSI A21.10). Sleeves shall be cement-mortar lined in accordance with AWWA C104 (ANSI A21.4). The exterior of sleeves shall have an asphaltic coating. Cutting-in sleeves shall provide a minimum of 10 inches of adjustment. Solid sleeves shall be long pattern style.

(f) Bolts and Nuts

1. Mechanical Joints

Mechanical joints shall be made with tee-head bolts and hexagonal nuts conforming to the requirements of AWWA C111. Bolts and nuts shall be high-strength, low-alloy steel. Bolt shanks shall be straight within $^{1}/_{16}$ inch per 6 inches in length. Bolts and nuts shall be sound, clean, and coated with a rust-resistant lubricant. The surface of the bolts and nuts shall be free of protrusions that would interfere with their fit in the make-up of the mechanical joint. Bolts and nuts shall be Cor Blue or equal.

2. Flanged Joints

Flanged joints shall be made with standard hexagonal head carbon steel machine bolts with heavy, hot pressed, hexagonal nuts conforming to the requirements of ANSI B18.2. Threads shall conform to ANSI B1.1 coarse thread series, Class 2 fit. Bolt length shall be such that the bolts shall protrude through the nut not more than ½ inch.

(g) Insulation

Insulation used for frost prevention shall be extruded polystyrene foam insulation with a minimum thickness of 2 inches with a minimum "R" value of 10.0 (at 75 degrees Fahrenheit mean temperature). Insulation shall have a minimum compressive strength of 40 psi.

(4) Construction

(a) Laying of Pipe

1. General

Before excavation of trenches is begun, the Contractor shall uncover the end of the existing pipeline to which the new pipeline is to be connected. This will permit adjustments in line and grade and avoid the use of extra fittings. The exposed end of an existing pipeline must be protected and blocked by the Contractor to prevent the blowing out of the plug or cap at the end of the pipeline.

2. Handling of Pipe and Fittings

The Contractor shall have sufficient and adequate equipment on the site of the work for unloading and lowering pipe and fittings into the trench. Extreme care shall be exercised by the Contractor in handling all pipe, fittings and special castings so as to prevent breakage and coating damage. Any significant damage to coating shall be repaired before installation. Under no circumstances shall pipe or fittings be dropped into the trench or so handled as to receive hard blows or jolts. All mud or concentration of dirt shall be removed prior to installation.

Every precaution shall be taken to prevent foreign materials from entering the pipe while it is being placed in the line. If the pipe cannot be placed in the trench without earth entering, the Engineer may require a heavy, tightly woven canvas bag of suitable size be placed over each end and left until the connection is to be made to the adjacent pipe. During the laying operations, no debris, tools, clothing or other materials shall be placed in the pipe.

3. Direction of Laying

Unless otherwise ordered, pipe shall be laid with the bell ends facing the direction of laying. When the grade exceeds two feet of rise per one hundred feet of trench, the bells shall face upgrade.

4. Cleaning of Pipe

The interior and exterior of all pipe shall be clean and free from all foreign material before being installed. The Contractor shall provide the necessary means to wipe, brush, swab, or air blast to remove any foreign material from the interior of the pipe as required by the Engineer.

(b) Protection of Open Pipe

At all times when pipe laying is not in progress, the open ends of pipe shall be closed by a watertight plug, cap, or other means accepted by the Engineer. This provision shall apply during the noon hour as well as overnight. If water is in the trench, the seal shall remain in place until the trench is pumped completely dry. No pipe shall be laid in water or when trench conditions are unsuitable.

(c) Thrust Restraint

All water main piping shall be provided with a joint restraint system to prevent movement caused by hydraulic thrust and pressure. Exposed water main piping shall have restrained joints. Horizontal buried water main piping, unless noted otherwise, shall be restrained by thrust blocking. Thrust blocks shall be cast against solid undisturbed ground and shall be installed so as to prevent contact or interference with pipe or fitting joints. Fittings shall be wrapped in plastic to prevent the concrete from bonding to the surface of the fitting. If adequate support against undisturbed soil cannot be obtained, metal harness anchorages or restrained joints shall be used.

Vertical buried water main piping shall have a joint restraint system or the pipe and fittings shall have an acceptable type of restrained joint. Rodding from harness systems shall not extend into walls or floors.

(d) Protection of Buried Metal Surfaces

All steel clamps, rods, bolts, and other metal accessories using reaction anchorage or joint harness and all mechanical pipe couplings, flanges, and sleeves installed underground shall be protected with a built-up mastic coating. Surfaces shall be cleaned by wire brushing immediately prior to application of the mastic. The mastic shall be molded firmly to encase all bolts, nuts, clamps, straps and flanges, and built-up to a uniform surface over the entire fitting. Materials shall be applied in full accordance with manufacturer's recommendations.

(e) Joining Pipe of Different Material or Outside Diameter

Where specified or required, pipes of different material or outside diameter shall be joined with mechanical pipe couplings. Couplings shall be suitable for the intended service and shall be installed in accordance with the manufacturer's instructions.

(f) Pipe Insulation

All pipeline constructed within 5½ feet of the ground surface or within 2 vertical feet of a storm sewer shall be protected from frost with insulation. The minimum width of rigid insulation varies with the depth of ground cover as shown in the following table:

Depth of Pipeline (Feet)	Minimum Width of Insulation (Feet)
2.0	9
2.5	8
3.0	7
3.5	6
4.0	5
4.5	4
5.0	3

The insulation shall be placed immediately above the bedding section or a minimum of 6 inches above the pipeline.

4.02 Polyvinyl Chloride (PVC) Water Main Pipe and Fittings

(1) Scope

Polyvinyl chloride (PVC) water main pipe and fittings includes all labor, materials, and equipment as necessary and required to furnish, install, and test 4-inch to 12-inch PVC water main pipe and fittings, as shown and specified.

(2) General Requirements

The Contractor shall submit manufacturer's data for the pipe, fittings, gaskets, and appurtenances.

(3) Materials

(a) Pipe

PVC water main pipe up to 12-inch diameter shall meet the requirements of AWWA C900 for bell end pipe with elastomeric-gasket joints. The pipe shall have the same outside diameter as ductile iron pipe. The pipe shall be pressure Class 150 (DR 18), unless noted otherwise.

(b) Fittings

Fittings shall conform to the requirements of AWWA C110 (ANSI A21.10) or AWWA C153 (ANSI A21.53). Fittings shall be pressure Class 350 ductile iron. Fittings shall be cement-mortar lined in accordance with AWWA C104 (ANSI A21.4). Cement-mortar lining shall be standard thickness, unless noted otherwise. The exterior of the fitting for buried service shall have an asphaltic coating.

(c) Joints

1. Fitting Joints

Fittings shall have mechanical or push-on joints that conform to the requirements of AWWA C111 (ANSI A21.11).

2. PVC Pipe Joints

PVC water main pipe shall have bell and spigot type push-on joints with the bell being integrally formed with the pipe. The joint shall be sealed using an elastomeric gasket meeting the requirements of ASTM D3139.

3. PVC Restrained Pipe Joints

PVC restrained pipe joints shall consist of a PVC coupling with beveled edges, two sealing gaskets, and two restraining grooves, plain end pipe with a restraining groove at each end, and nylon restraining splines for each groove. The joint shall be capable of providing full restraint for the thrust generated at the working pressure of the pipe. PVC restrained pipe joints shall be CertainTeed Certa-Lok AWWA C900/RJ PVC pipe.

(d) Polyethylene Wrap

Polyethylene wrap shall meet the requirements of AWWA C105 (ANSI A21.5). Polyethylene wrap shall be a high-density, cross-laminated polyethylene film with a minimum tensile strength of 5,000 psi and a nominal thickness of 4 mils.

(4) Construction

(a) General

Unless otherwise indicated, buried, embedded, and encased pipe and fittings shall have push-on joints. Restrained joint pipe may be used as carrier pipe in casings. Mechanical joint fittings shall be used where specified or when accepted by the Engineer.

(b) Joining Pipe

1. Push-on Joints

Contractor shall provide a bell hole at each joint for push-on joint pipe. The bell hole shall be no larger than necessary to accomplish proper joint assembly. When the joint has been made, the void under the bell should be filled with bedding material to provide adequate support to the pipe throughout its entire length.

Assemble joints in accordance with recommendations of the manufacturer. Proper jointing may be verified by rotation of the spigot by hand or with a strap wrench. If unusual joint resistance is encountered or if the insertion mark does not reach the flush position, disassemble the joint, inspect for damage, reclean the joint components and repeat the assembly steps. Note that fitting bells may permit less insertion depth than pipe bells.

For shorter than standard pipe lengths, field cuts may be made with either hand or mechanical saws or plastic pipe cutters. Ends shall be cut square and perpendicular to the pipe axis. Spigots shall have burrs removed and ends smoothly beveled by a mechanical beveler or by hand with a rasp or file. Field spigots shall be stop-marked with felt tip marker or wax crayon for the proper length of assembly insertion. The angle and depth of field bevels and lengths to stop-marks shall be comparable to factory pipe spigots.

Thoroughly clean the groove and bell socket and insert the gasket, making sure that it faces the proper direction and that it is correctly seated. After cleaning dirt or foreign material from the spigot end, apply lubricant in accordance with the pipe manufacturer's recommendations. The lubricant is supplied in sterile cans and every effort should be made to keep it sterile. Be sure that the spigot end is beveled. A square or sharp edges may damage or dislodge the gasket and cause a leak. Keep the joint straight while pushing the spigot end into the bell of the pipe. Gaskets to be installed in cold weather shall be warmed first.

Deflected joints shall be made by pushing the spigot into the bell about 2-inch short of the reference line then moving the loose bell end of the assembled length not more than the maximum allowable offset. Pipe offsets shall only be made with manual effort. Pipe that is not furnished with a depth mark shall be marked before assembly to assure that the spigot end is inserted to the required depth of the joint.

Whenever it is desirable to deflect push-on joint PVC pipe, the amount of deflection shall not exceed the pipe manufacturers written recommendations or the maximum limits in the following table, which ever is more restrictive:

Nominal Pipe Size, inches	Deflection Angle degrees	Maximum Offset Inches, 20 ft. L	Approx. Radius of Curve-R Produced by Succession of Joints, 20 ft. L
4	3	12½	382
6	3	12½	382
8	3	12½	382
10	3	12½	382
12	2.5	10½	458

2. Restrained Joints

Assemble restrained joints in accordance with recommendations of the manufacturer. Clean surfaces to be joined. Lubricate and align pipe. Insert pipe into coupling and insert spline through insertion hole in coupling. Cut off spline so that it protrudes from the insertion hole approximately $^{3}/_{8}$ inch.

(c) Joining Pipe to Fittings

1. Push-on Joints

Thoroughly clean the groove and bell socket and insert the gasket, making sure that it faces the proper direction and that it is correctly seated. After cleaning dirt or foreign material from the spigot end, apply lubricant in accordance with the pipe manufacturer's recommendations. The lubricant is supplied in sterile cans and every effort should be made to keep it sterile. Be sure that the spigot end is beveled. A square or sharp edges may damage or dislodge the gasket and cause a leak. Keep the joint straight while pushing the spigot end into the bell of the fitting. Gaskets to be installed in cold weather shall be warmed first.

Whenever it is desirable to deflect push-on joint PVC pipe, with ductile iron or cast iron push-on joint fittings, the amount of deflection shall not exceed the maximum limits shown in the following table:

Nominal Pipe Size, inches	Deflection Angle, degrees
4	5
6	5
8	5
10	5
12	5

2. Mechanical Joints

Wipe the socket and the spigot end clean. Wash the spigot end, socket, and gasket with a soap solution to improve gasket seating. Place the gland on the spigot end with the lip extension toward the spigot end, followed by the gasket with the narrow edge of the gasket toward the spigot end. Insert the pipe into the socket and press the gasket firmly and evenly into the gasket recess. Keep the joint straight during assembly. Make deflection after joint assembly but before tightening bolts. Push the gland toward the socket and center it around the pipe with the gland lip against the gasket. Insert bolts and hand tighten nuts.

Tighten the bolts to the normal range of bolt torque while at all times maintaining approximately the same distance between the gland and the face of the flange at all points around the socket. This shall be accomplished by partially tightening the bottom bolt first, then the top bolt, next the bolts at either side, finally the remaining bolts. Repeat the process until all bolts are within the appropriate range of torque. All nuts shall be tightened with a suitable (preferably torque-limiting) wrench. The torque for various sizes of bolts shall be as follows:

Size (in.)	Range of Torque (ft-lb)
5/8	40-60
¾	60-90
1	70-100
1¼	90-120

Whenever it is desirable to deflect push-on joint PVC pipe with ductile iron or cast iron mechanical-joint fittings, the amount of deflection shall not exceed the maximum limits shown in the table below.

Nominal Pipe Size, inches	Deflection Angle, degrees
4	8.30
6	7.12
8	5.35
10	5.35
12	5.35

(d) Polyethylene Wrap

Unless specified otherwise, all fittings, valves, and appurtenances shall be protected from corrosion by use of a polyethylene wrap installed in accordance with AWWA C105 (ANSI A21.5).

(e) Field Closure

Field closures shall be made by cutting the pipe in a neat workmanlike manner perpendicular to the axis of the pipe without damage to the pipe or lining so as to leave a smooth end. All cuts shall be made with an acceptable mechanical cutter. When the field cut pipe is to be used with rubber gasket joints, it shall be tapered by grinding or filing about 1/8-inch back at an angle of about 30 degrees and all sharp edges shall be removed. Plain end pipe shall be joined with a solid sleeve.

(f) Bedding

Unless otherwise noted, all PVC water main pipelines shall have water main bedding.

(5) Testing

All pipelines and appurtenances shall be tested by a hydrostatic test composed of a pressure test and a leakage test.

4.03 Resilient-Seated Gate Valves

(1) Scope

Resilient-seated gate valves includes all labor, material, equipment, and services necessary to furnish, install and test under actual operating conditions 4-inch to 12-inch resilient-seated gate valves and boxes as shown and specified.

(2) General Requirements

(a) Submittals

The Contractor shall submit manufacturer's data and shop drawings for valves, valve box mounting bracket, and valve boxes.

(b) General

Unless otherwise indicated valves shall be as specified herein. Valves shall be designed for a 200 psig working pressure. Buried valves shall have push-on or mechanical joint ends and a 2-inch operating nut. Exposed valves shall have flanged ends and a handwheel or crank-type operator. The direction of the valve operating wheel, lever, or wrench nut shall be to the left (counterclockwise) to open the valve.

(c) Manufacturer

Resilient-seated gate valves shall be Clow, Mueller, or Kennedy.

(3) Materials

(a) Resilient-Seated Gate Valves

Resilient-seated gate valves shall be full opening, non-rising stem, compression seated wedge type valves conforming to the requirements of AWWA C509. Valves shall have an epoxy coated cast or ductile iron body, bronze stem, and a double sealing permanently bonded fully encased gate. Valve stem shall have O-ring seals. The O-ring stem seal shall be so designed that the seal above the stem collar can be replaced with the valve under pressure in the full open position. Bolts, nuts, washers, and other attachment hardware for bonnet, stuffing box, and operating nut shall be AISI Type 304 stainless steel.

(b) Valve Boxes

Valve boxes shall be cast iron, three piece screw-type with 5¼-inch shaft diameter and Number 6 or 8 base. Valve box shall provide a minimum of 18 inches of vertical adjustment unless otherwise noted. Cover shall be marked "Water". Valve boxes shall be Tyler/Union Series 6860, Valvco Type LBHH, or equal.

(c) Valve Box Mounting Bracket

Valve box mounting brackets for resilient-seated gate valves shall be a fabricated steel assembly with a ½-inch thick neoprene gasket. The valve box mounting bracket shall be as manufactured by Adaptor Inc. or equal.

(d) Valve Stem Extension

Valve stem extensions shall consist of a 2-inch square operating nut, centering ring, 1½-inch square stem and bottom socket with two hex head bolts to attach the extension to the operating nut of the valve. Valve stem extension shall be Diversified Fabricators, Inc. Adjustable Extension Stem or equal.

(4) Installation

(a) Buried Valves

The valve shall be set on hardwood blocking 2 x 6 by 18 inches with the long side of the block set perpendicular to the water main. Pipe bedding material shall be tamped in place from a point above the main to a point 6 inches above the bottom of the valve box base to prevent the valve box or base from shifting. A sheet of polyethylene shall be placed under the mounting bracket to prevent bedding material from entering around the operating nut.

A valve box shall be set over all gate valves unless vaults or special chambers are specified. The valve box shall be set on a valve box mounting bracket. Valve boxes and covers shall be centered over the valve operating nut and the entire box assembly secured in place before backfilling operations. Valve boxes that become shifted or filled during backfilling shall be entirely uncovered and reset. Valve boxes shall be brought to grade after final grade has been established.

Valve boxes located in traffic areas shall be brought to finished grade of the roadway prior to placing the binder course. A temporary asphalt ramp shall be provided around the valve box from the top of the valve box to the binder course. The ramp shall be sloped to provide protection to the valve box until the surface course is constructed. The ramp shall be a minimum diameter of 4 feet around the valve box. The ramp shall be removed prior to placement of the surface course. The surface course shall be constructed to the top of the valve box.

An extension stem shall be provided where the depth to the operating nut is greater than seven feet below finished grade. The extension stem shall be sized so the operating nut is between five and six feet below finished grade.

(b) Exposed Valves

Each valve shall be aligned, connected and installed at the location shown in accordance with the manufacture's recommendations. The pipes around the valve shall be supported so they do not induce strain on the valve. The valve operator shall be arranged to provide ease of access for operation and maintenance.

(5) Testing

The valve shall be opened and closed not less than three times after installation. The number of turns to open and close the valve shall be recorded each time. After testing for proper operation the valve shall be closed and pressure tested at 150 percent of working pressure in both directions.

4.04 Tapping Sleeves and Valves

(1) Scope

Tapping sleeves and valves includes all labor, materials, and equipment necessary to furnish, install, and test under actual operating conditions tapping sleeves and valves on active water main pipelines, as shown and specified.

(2) General Requirements

(a) Submittals

The Contractor shall submit manufacturer's data and shop drawings for the tapping sleeve and valve.

(b) Manufacturer

Tapping sleeves shall be Mueller H-615, Waterous, U.S. Pipe T-9, Clow F-5205, or equal. Tapping valves shall be Mueller H-687, Waterous, U.S. Pipe Metroseal 250 Fig. 5860, Clow, or equal.

(3) Materials

(a) Tapping Sleeves

Tapping sleeves shall be of the flanged outlet type designed for attachment of the flanged inlet of a tapping valve. Tapping sleeves shall have mechanical joint ends for connecting to the existing pipeline. Sleeve body shall be cast iron or carbon steel and shall have a ¾-inch NPT test plug. Sleeve shall be rated for 150 psi working pressure.

(b) Tapping Valves

Tapping valves shall be resilient seated gate valves with flanged inlet ends for attachment to the outlet flange of the tapping sleeve, and with a mechanical joint outlet end suitable for attachment to a drilling machine. Unless otherwise specified, each tapping valve shall be arranged to turn left (counterclockwise) to open.

With the exception of valve ends and oversized seat rings to permit entry of the drilling machine cutters the valve shall conform to the requirements of AWWA C509. Tapping valves shall be full opening, non-rising stem type with a 2-inch operating nut.

Valves shall have an epoxy coated cast iron body, bronze stem, and a double sealing permanently bonded fully encased gate. The valve bonnet shall be provided with a ½-inch or $^{3}/_{8}$-inch diameter threaded, solid, malleable or cast iron test plug. Valve stem shall have O-ring seals. The O-ring stem seal shall be so designed that the seal above the stem collar can be replaced with the valve under pressure in the full open position. Bolts, nuts, washers, and other attachment hardware for the bonnet, stuffing box, and operating nut shall be AISI Type 304 stainless steel.

(c) Valve Boxes

Valve boxes shall be cast iron, three-piece screw-type with 5¼-inch shaft diameter. Cover shall be marked "Water". Valve box shall be sized to provide a minimum of 18 inches of vertical adjustment. Valve box shall be Clow, Tyler Series 6860, or equal.

(d) Valve Box Mounting Bracket

Valve box mounting bracket shall be fabricated steel assembly with a ½-inch thick neoprene gasket. The valve box mounting bracket shall be as manufactured by Adaptor Inc. or equal.

(e) Valve Stem Extension

Valve stem extensions shall consist of a 2-inch square operating nut, centering ring, 1½-inch square stem and bottom socket with two hex head bolts to attach the extension to the operating nut of the valve. Valve stem extension shall be Diversified Fabricators, Inc. Adjustable Extension Stem or equal.

(4) Installation

Each tapping sleeve and valve assembly shall be furnished and installed complete with gaskets and bolts as required for the sleeve and flanged connection between the sleeve and valve. Strict conformity with the directions and instructions of the manufacturer shall be followed for the tapping sleeves and valves furnished.

After tapping the valve shall be set on 2 x 6 by 18-inch hardwood blocking with the long side of the block set perpendicular to the water main. Pipe bedding material shall be tamped in place from a point above the main to a point 6 inches above the bottom of the valve box base to prevent the valve box or base from shifting. A sheet of polyethylene shall be placed under the mounting bracket to prevent bedding material from entering around the operating nut.

A valve box shall be set over all gate valves unless vaults or special chambers are specified. Valve boxes and covers shall be centered over the valve operating nut and the entire box assembly secured in place before backfilling operations. Valve boxes that become shifted or filled during backfilling shall be entirely uncovered and reset. Valve boxes shall be brought to grade after final grade has been established.

Valve boxes located in traffic areas shall be brought to finished grade of the roadway prior to placing the binder course. A temporary asphalt ramp shall be provided around the valve box from the top of the valve box to the binder course. The ramp shall be sloped to provide protection to the valve box until the surface course is constructed. The ramp shall be a minimum diameter of 4 feet around the valve box. The ramp shall be removed prior to placement of the surface course. The surface course shall be constructed to the top of the valve box.

An extension stem shall be provided where the depth to the operating nut is greater than 7 feet below finished grade. The extension stem shall be sized so the operating nut is between 5 and 6 feet below finished grade.

(5) Testing

The valve shall be opened and closed not less than three times before the tapping machine is removed. After testing for proper operation, the valve shall be closed and the tapping machine shall be removed so the valve may be inspected for leakage.

4.05 Fire Hydrants

(1) Scope

Fire hydrants includes all labor, materials, and equipment necessary to furnish, install, and test under actual operating conditions fire hydrants, as shown and specified.

(2) General Requirements

(a) Submittals

The Contractor shall submit manufacturer's data and shop drawings for fire hydrants and hydrant markers. Data shall include headloss characteristics of the hydrant in the form of a graph showing flow rate in gpm and pressure loss in psig.

(b) Special Requirements

The fire hydrants shall be painted red and shall have a 1½-inch Pentagon shape operating and outlet nozzle cap nuts conforming to AWWA C502. Hydrant shall open by turning to the left (counterclockwise). A hydrant marker shall be provided for each hydrant.

(c) Manufacturer

Hydrants shall be Pacer WB-67-250 as manufactured by Waterous Company.

(3) Materials

(a) Fire Hydrants

Fire hydrants shall be traffic pattern, dry barrel fire hydrants conforming to the requirements of AWWA C502. The hydrant shall have a 5¼-inch main valve opening, 6-inch mechanical joint or push-on joint connection, two 2½-inch hose connections, one 4½-inch pumper connection, O-ring seals, and compression type shutoff. Connections shall have National Standard hose coupling threads. All bolts, nuts, washers, and other buried attachment hardware shall be AISI Type 304 stainless steel. Hydrant shoes shall be lugged to accept ¾-inch rods. Hydrant length shall provide a minimum of 7'-0" cover over inlet pipe.

(b) Fire Hydrant Markers

Fire hydrant markers shall consist of a 4-foot long, ¼-inch diameter FRP rod, 4-inch long spring and attachment bracket. Rod shall have a ¼-inch red plastic cap at the tip. Hydrant markers shall be Country Hydrant Markers as manufactured by Country Enterprises, Inc. or equal.

(c) Fire Hydrant Leads

Fire hydrant leads shall be AWWA C900 DR18 PVC water main pipe.

(4) Construction

(a) General

Hydrants shall be set on hardwood blocking and encased in polyethylene wrap as shown in the detail. Immediately before installation, the hydrant shall be thoroughly inspected and cleaned on the interior and shall be opened and closed as many times as necessary to determine if all parts are in proper working order. Hydrant marker shall be installed in accordance with manufacturers instructions.

(b) Location and Position

Hydrants shall be located as shown or as required so as to provide complete accessibility and minimize the possibility of damage from vehicles or injury to pedestrians. When placed behind the curb, the hydrant barrel shall be set so that no portion of the pumper or hose nozzle cap will be less than 6 inches nor more than 12 inches from the gutter face of the curb. When set in the lawn space between the curb and the sidewalk or between the sidewalk and the property line, no portion of the hydrant or nozzle cap shall be within 6 inches of the sidewalk.

All hydrants shall stand plumb and shall have their nozzles parallel with, or at right angles to, the roadway, with the pumper nozzle facing the roadway. Hydrants shall be set to the established grade, with nozzles 19¾ inches above the ground unless otherwise shown or as required by the Engineer.

(c) Hydrant Drainage

Hydrant drainage shall be provided by placing drain rock around the hydrant to a minimum of 6 inches above the waste opening in the hydrant, and at least 1 foot around the hydrant. The drain rock shall be covered with a sheet of polyethylene material.

4.06 HDPE Water Services

(1) Scope

HDPE water services include all labor, material, equipment, and services necessary and required to furnish, install, and test under actual operating conditions ¾-inch to 2-inch high density polyethylene water service lines, including corporation stop, coupling, curb stop, and curb box, as shown and specified.

(2) General Requirements

(a) General

All corporation stops, couplings, curb stops, and fittings shall meet the requirements of AWWA C800. Valves and fittings shall be pressure Class 150. Valves and fittings shall be A.Y. McDonald, Ford, Mueller, or equal.

(b) Submittals

The Contractor shall submit manufacturer's data and shop drawings for corporation stops, couplings, curb stops, curb boxes, plastic water service piping, and pipe fittings.

(3) Materials

(a) Service Pipe

Service pipe shall be pressure Class 200 HDPE tubing conforming to the requirements of AWWA C901 and ASTM D2737. Service pipe shall have a SDR of 9 and shall have outside diameter dimensions of copper tubing. Tubing shall be manufactured from material having a standard PE code designation of PE 3408.

(b) Couplings and Fittings

Couplings and fittings shall be cast brass with a uniform wall thickness and strength, and shall be free of defects which may affect their serviceability. Couplings and fittings shall be of the compression type suitable for use with copper or polyethylene tubing. Insert stiffeners for plastic tubing shall be AISI Type 304 stainless steel. The insert stiffeners shall be dimpled and flanged to maintain placement within the service pipe. Couplings shall be A.Y. McDonald 4758Q or equal.

(c) Corporation Stop and Curb Stop

Corporation stops shall have ball style valves and AWWA standard thread inlets and tube compression outlets. Corporation stops shall be A.Y. McDonald 4701BQ or equal. Curb stops shall be Minneapolis pattern ball valves with tube compression inlets and outlets. Curb stops shall be A.Y. McDonald 6104Q.

(d) Curb Box

Curb boxes shall have a Minneapolis pattern base, 1¼-inch upper section, 48-inch long stationary rod, and A.Y. McDonald 5614L lid with 1¼-inch pentagon plug. Curb box shall have an extended length of 7'-6" and shall have 12 inches of adjustment. Curb boxes shall be A.Y. McDonald 5614 or 5615.

(e) Service Saddles

Service saddles shall be of the double bolt saddle clamp type. Service saddles shall have SBR (styrene butadiene) or neoprene gaskets and AISI Type 304 stainless steel bodies and hardware. Service saddles for 4-inch to 12-inch diameter pipe shall be Cascade Style CSC2 or equal. Service saddles for 14-inch to 24-inch diameter pipe shall be Cascade Style CS22 or equal.

(4) Construction

(a) General

A water service shall consist of a corporation stop, service pipe, and curb stop with box. The minimum size of water services shall be ¾ inch, unless noted otherwise. The corporation stop and curb stop shall be the same size as the service pipe. No joints shall be permitted between the corporation stop and the curb stop unless authorized by the Engineer.

(b) Joining Pipe

The pipe shall be joined with compression type fittings in accordance with the manufacturer's instructions for the fittings provided. All ends shall be cut squarely and rough edges or burrs removed. An insert stiffener shall be provided at the end of each pipe to be joined.

(c) Bedding and Backfill

Unless otherwise indicated, water services shall be installed using a water main bedding section and the same backfill section as the water main.

(d) Alignment and Grade

Unless otherwise indicated, the service pipe shall be constructed at a right angle to the roadway or parallel to the sanitary sewer lateral. New water services shall be constructed with a minimum cover of 7 feet. Curb stops shall be placed at a depth between 6½ and 7 feet below established or proposed grade. The water service shall be insulated where 5½ feet of cover cannot be maintained.

(e) Water Services installed by Boring

Water services shall be installed by boring where required or permitted by the Engineer. The location of the boring and access pits shall be as close as possible without disturbing the surface to be bored under. The Contractor shall use any method of boring that is suitable for the soil conditions. The outside diameter of the boring devices shall be as close to the outside diameter of the water service as possible. The Contractor shall make every effort to minimize the size of the hole and minimize loss of soil outside the hole. Once the jacking operation has started it shall be continued uninterrupted until the water service is installed. All significant voids shall be packed with a sand-cement slurry.

(f) Service Connections

Service connections to PVC water mains shall be made with a corporation stop installed in a service saddle. The corporation stop shall be installed by placing two layers of 3-mil TFE tape on the male threads of the corporation stop and threading it into the service saddle.

Taps for service saddles shall only be made after the water main is placed in service. The tapping machine shall be designed to drill a hole in the water main slightly smaller than the inside diameter on the corporation stop. The tapping machine cutting tool shall be a shell-type cutter that will retain the pipe coupon and is designed to accommodate the wall thickness of AWWA C900 DR 14 pipe. The tap for the corporation stop shall be located a minimum of 2 feet from any pipe or fitting joint and shall have a minimum of 18 inches of clearance between taps.

The corporation stop shall be wrapped in plastic to protect it from dirt and damage until the water service pipe is connected. The water service pipe shall only be connected to the new water main after a safe bacteriological sample has been obtained. A plug shall be installed in the corporation stop if no water service pipe is to be provided.

(g) Curb Box Installation

The curb box shall be plumbed and braced so it will remain vertical throughout the backfilling. Sufficient excavation shall be made for the curb box installation to insure proper setting and backfilling around the curb box. Curb boxes that become shifted or filled during backfilling shall be entirely uncovered and reset.

Before placing backfill around the curb box, the Contractor shall wrap polyethylene around the curb stop and box and bedding material shall be tamped in place from a point above the service pipe to a point 12 inches up on the curb box.

(h) Curb Stop and Service Pipe Closure

A copper or plastic disc shall be inserted in the curb stop on the lot side if no service pipe is provided.

(i) Water Service Marker

The water service shall be extended to within 1-foot of the property line or the edge of the easement, unless otherwise noted. The end of the water service shall be marked with a 6-foot long 2 x 4 stake. The top of the 2 x 4 stake shall extend 12 to 24 inches above grade. The top of the 2 x 4 stake shall be painted blue.

(5) Testing

The water service installation shall be tested for leaks prior to the placement of backfill and before the curb box is installed. The corporation stop at the water main shall be turned on and the curb stop opened until a full flow of water is obtained. The curb stop shall then be turned off and all joints checked for leaks. Upon acceptance of the service piping, the remainder of the installation work shall be completed.

4.07 Water Main Testing

(1) Scope

Water main testing includes all labor, equipment, and material as required or necessary to hydrostatically test pipelines as shown and specified.

(2) General Requirements

(a) Test Pressure

All water main pipeline shall be tested by the Contractor and shall successfully pass a hydrostatic test composed of a pressure test and a leakage test. Pressure tests shall be made at 150 percent of working pressure. Leakage tests shall be made at 125 percent of working pressure. Working pressure (WP) is defined as 100 psi.

(b) Submittals

The Contractor shall submit three copies of all the hydrostatic test results.

(3) Procedure

Water main pipeline shall have a pressure test followed by a leakage test. If it is found unnecessary to add water to maintain pressure during the duration of the pressure test, the leakage test may, with the approval of the Engineer, be waived.

(a) Pressure Test

After the test connections are made and the pipeline is filled with water, the test section shall be subjected to the working pressure. After examination of exposed parts of the system, the test pressure will be increased to 150 percent of working pressure. The pipeline shall be examined and if any defects are found, the Contractor shall immediately make the necessary repairs at his own expense. The pressure test shall be repeated until no defects can be found. The duration of the final pressure test shall not be less than two continuous hours.

(b) Leakage Test

The leakage test shall be conducted after satisfactory completion of the pressure test. The test section shall be subjected to 125 percent of the working pressure. Leakage is defined as the quantity of water to be supplied into the newly laid pipe, or any valved section of it, necessary to maintain the specified leakage test pressure after the main has been filled with water and the air expelled.

Leakage for buried pipelines shall not exceed the number of gallons per hour as determined by the following formula for rubber-sealed joints during the duration of the test.

$$L = SD(P)^{1/2}/133{,}200$$

L - allowable leakage in gallons per hour
S - length of pipe tested in feet
D - nominal diameter of pipeline in inches
P - average pressure in pounds per square inch gauge

In case the section under test contains joints of various diameter, the allowable leakage will be the sum of the computed leakage for each size of joint as determined by the following formula:

$$L = ND(P)^{1/2}/7400$$

L - allowable leakage in gallons per hour
N - number of joints under test
D - nominal diameter of pipeline in inches
P - average pressure in pounds per square inch gauge

Leakage for exposed piping (not buried) shall be zero throughout the duration of the test.

Should any test section fail to meet the leakage test, the Contractor shall immediately make the necessary repairs at his own expense. The duration of the final leakage test shall be two continuous hours.

4.08 Disinfection of Water Mains

(1) Scope

Disinfection of water mains includes all materials, equipment, labor, and services necessary to disinfect, flush, and test water mains, as shown and specified.

(2) General Requirements

The Contractor shall submit his proposed procedure for disinfecting the water mains for review prior to performing the work. Disinfection shall be in accordance with AWWA C651.

(3) Materials

Chlorine compounds that shall be used for disinfection shall be sodium hypochlorite solution or calcium hypochlorite granules or tablets.

(a) Sodium Hypochlorite Solution

Sodium hypochlorite solution shall contain 5 percent to 15 percent available chlorine and shall be packaged in glass, rubber-lined, or plastic containers, one quart to five gallons in size.

(b) Calcium Hypochlorite

Calcium hypochlorite shall contain approximately 65 percent available chlorine by weight and shall be tablet or granular form.

(4) Construction

(a) Disinfecting

1. Tablet Method

Tablet method shall consist of placing calcium hypochlorite granules or tablets in the water main as it is being installed. Pipes and fittings must be kept clean and dry during construction. The quantity of granules or tablets shall be as shown in Tables 1 or 2.

Table 1 Weight of Calcium Hypochlorite Granules to be Placed at Beginning of Main and at Each 500 Feet Interval

Pipe Diameter, inches	Calcium Hypochlorite Granules, oz.
4	0.5
6	1.0
8	2.0
12	4.0

When installation has been completed, the main shall be filled with water at a rate such that water within the main will flow at a velocity no greater than 1 foot per second and all air pockets are eliminated. The water shall remain in the pipe for at least 24 hours. All valves shall be positioned so that the strong chlorine solution in the treated main will not flow into water mains in active service.

Table 2 Number of 5-g Calcium Hypochlorite Tablets Required for Dose of 25 mg/l(a)

Pipe Diameter inches	Length of Pipe Section, feet: 13 or less	18	20	30	40
	Number of 5-g Calcium Hypochlorite Tablets				
4	1	1	1	1	1
6	1	1	1	2	2
8	1	2	2	3	4
10	2	3	3	4	5
12	3	4	4	6	7

(a)Based on 3.25 g available chlorine per tablet; any portion of tablet rounded to next higher number.

2. Continuous-Feed Method

Calcium hypochlorite granules or tablets shall be placed in the pipe sections using the tablet method. A preliminary flushing of the water main shall be performed to remove particles and the pipe shall be refilled with potable water. The flushing velocity shall be a minimum of 2.5 feet per second in the water main. A chlorine solution shall be injected in the water main at a point no more than 10 feet downstream of the beginning of the new main. The chlorine solution shall be added at a constant rate such that the water shall have not less than 25 mg/l of free chlorine. Chlorine application shall not stop until the entire main is filled with heavily chlorinated water. At the end of a 24-hour period, the treated water shall have a residual of not less than 10 mg/l free chlorine.

3. Slug Method

Calcium hypochlorite granules or tablets shall be placed in the pipe sections using the tablet method. A preliminary flushing of the water main shall then be performed to remove particles and the pipe shall be refilled with potable water. The flushing velocity shall be a minimum of 2.5 feet per second in the water main. A chlorine solution shall then be injected in the water main at a point not more than 10 feet downstream of the beginning of the new main. The chlorine solution shall be added at a constant rate such that the water shall have not less than 100 mg/l of free chlorine. The chlorine shall be applied continuously and for a sufficient period to develop a solid concentration or "slug" of chlorinated water that will, as it moves through the main, expose all interior surfaces to a concentration of 100 mg/l for at least 3 hours. Free chlorine residual shall be measured as the slug moves through the pipeline. If the concentration falls below 50 mg/l the flow shall be stopped and the chlorination equipment shall be located ahead of the slug. Chlorine shall be added to the slug until a concentration of 100 mg/l is obtained.

(b) Final Flushing

Final flushing of the water main shall not commence until after required retention period for disinfection. Heavily chlorinated water shall not remain in the water main for prolonged periods. The main shall be flushed until the chlorine measurements show the concentration in the water leaving the main is no higher than 1.0 mg/l.

The environment to which the chlorinated water is to be discharged shall be inspected. If there is any question that the chlorinated discharge will cause damage to the environment, then a reducing agent shall be applied to the water to be wasted to thoroughly neutralize the chlorine residual remaining in the water. Where necessary, federal, state, and local regulatory agencies should be contacted to determine special provisions for the disposal of heavily chlorinated water.

(c) Testing

Testing for bacteriological safe samples shall be completed after final flushing and prior to placing the water main in service. The bacteriological safe samples shall be obtained in accordance with Section NR 811.07(3) of the Wisconsin Administrative Code.

If the initial disinfection fails to produce safe bacteriological samples, the main shall be reflushed and resampled. If the second set of samples fail, the main shall be rechlorinated by the continuous-feed or slug method of chlorination until safe results are obtained.

STANDARD DETAILS

TRENCH AND FILL SECTION NOTES: (8)

1. SEE SPEC'S FOR SUBGRADE REQUIREMENTS.
2. 95% COMPACTION IN TOP 3'-0 IN ROADWAY.
3. 90% COMPACTION IN ROADWAY.
4. SIDE SLOPE TO BE DETERMINED BY SOIL CONDITIONS.
5. BACKFILL SECTION AS SPECIFIED.
6. BEDDING SECTION AS SPECIFIED.
7. TOE PENETRATION OF SHEETING AS REQ'D.
8. REPLACE PAVEMENT TO MATCH EXISTING, UNLESS SPECIFIED OTHERWISE.

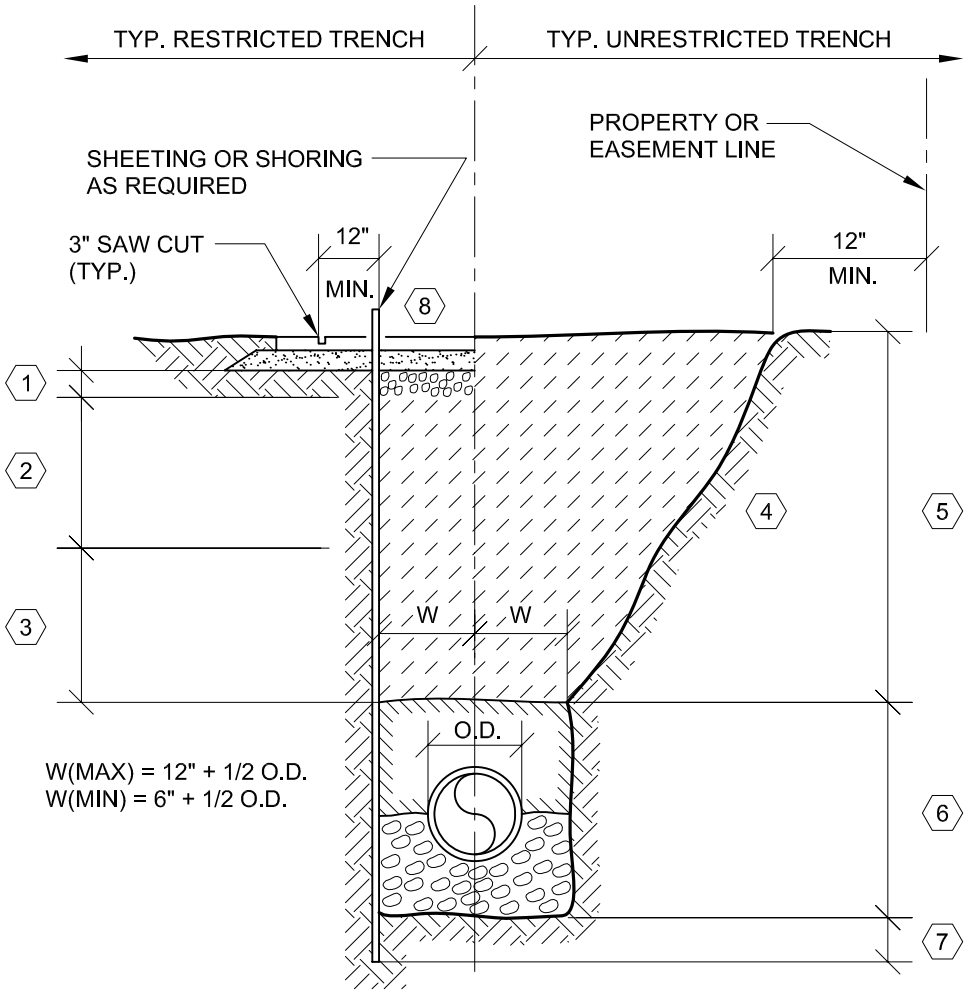

PROJECT

STANDARD DETAILS FOR UTILITY CONSTRUCTION

TOWN OF SALEM
UTILITY DISTRICT
KENOSHA COUNTY, WISCONSIN

TITLE

TYPICAL TRENCH SECTION

DRAWN	GD	JOB NO. E121-21.02	DETAIL NO.
CHECKED	CDK	DATE 2/28/08	C-1

J:\Salem\E121-21.02\C-01.dwg, 3/3/2008 2:00:57 PM, 1:1

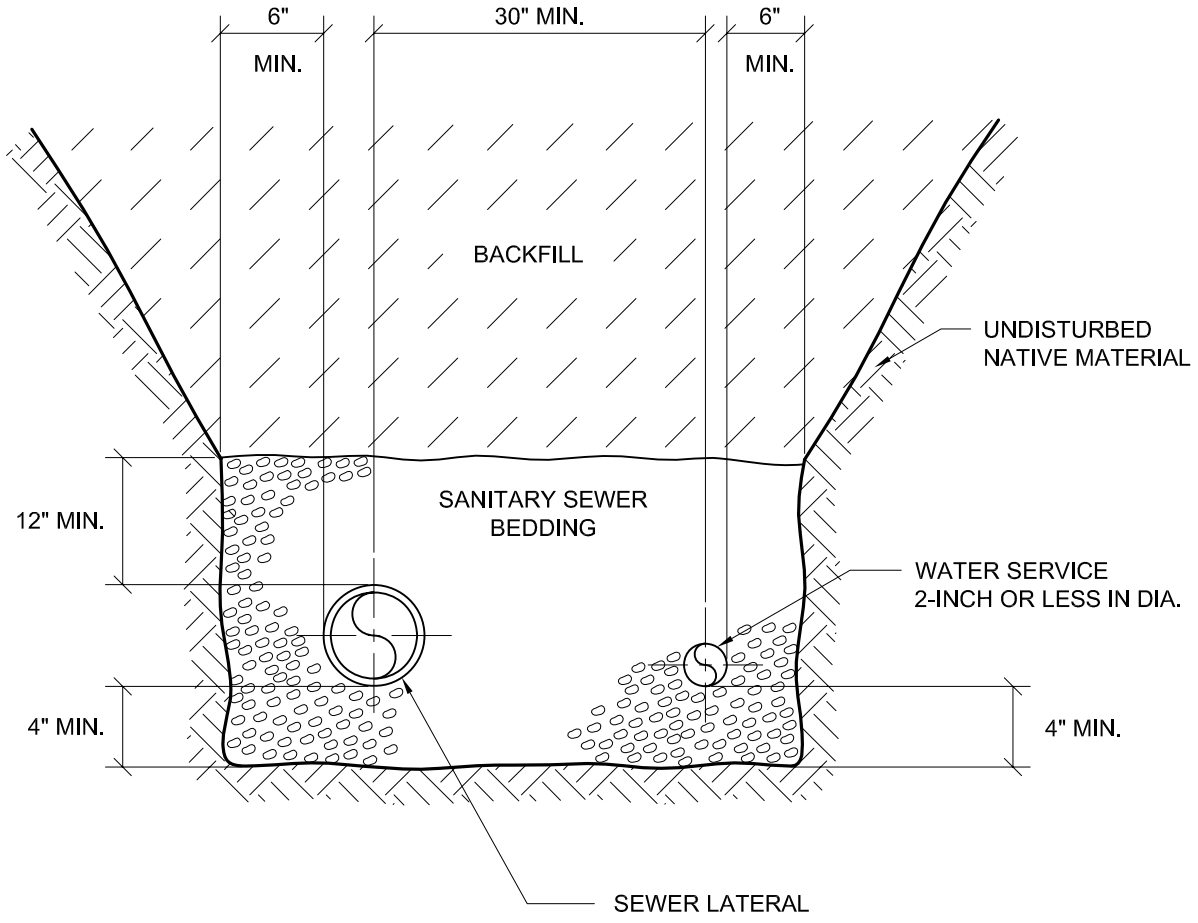

PROJECT STANDARD DETAILS FOR UTILITY CONSTRUCTION

TOWN OF SALEM
UTILITY DISTRICT
KENOSHA COUNTY, WISCONSIN

TITLE HORIZONTAL SEPARATION LATERALS IN COMMON TRENCH

DRAWN	GD	JOB NO. E121-21.02	DETAIL NO.
CHECKED	CDK	DATE 2/28/08	C-2

J:\Salem\E121-21.02\C-02.dwg, 3/3/2008 2:02:44 PM, 1:1

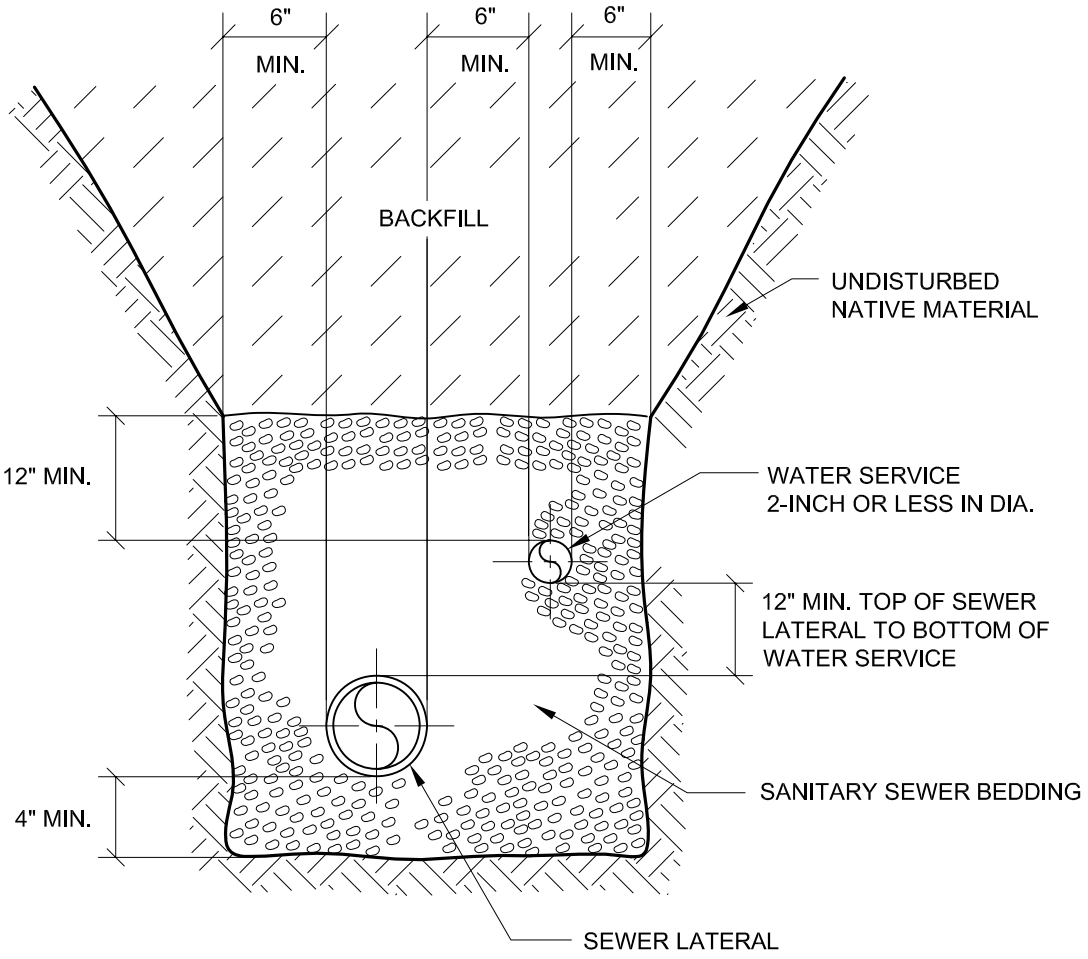

PROJECT STANDARD DETAILS FOR UTILITY CONSTRUCTION			
TOWN OF SALEM UTILITY DISTRICT KENOSHA COUNTY, WISCONSIN	TITLE VERTICAL SEPARATION LATERALS IN COMMON TRENCH		
	DRAWN GD	JOB NO. E121-21.02	DETAIL NO.
	CHECKED CDK	DATE 2/28/08	C-3

J:\Salem\E121-21.02\C-03.dwg, 3/3/2008 2:03:43 PM, 1:1

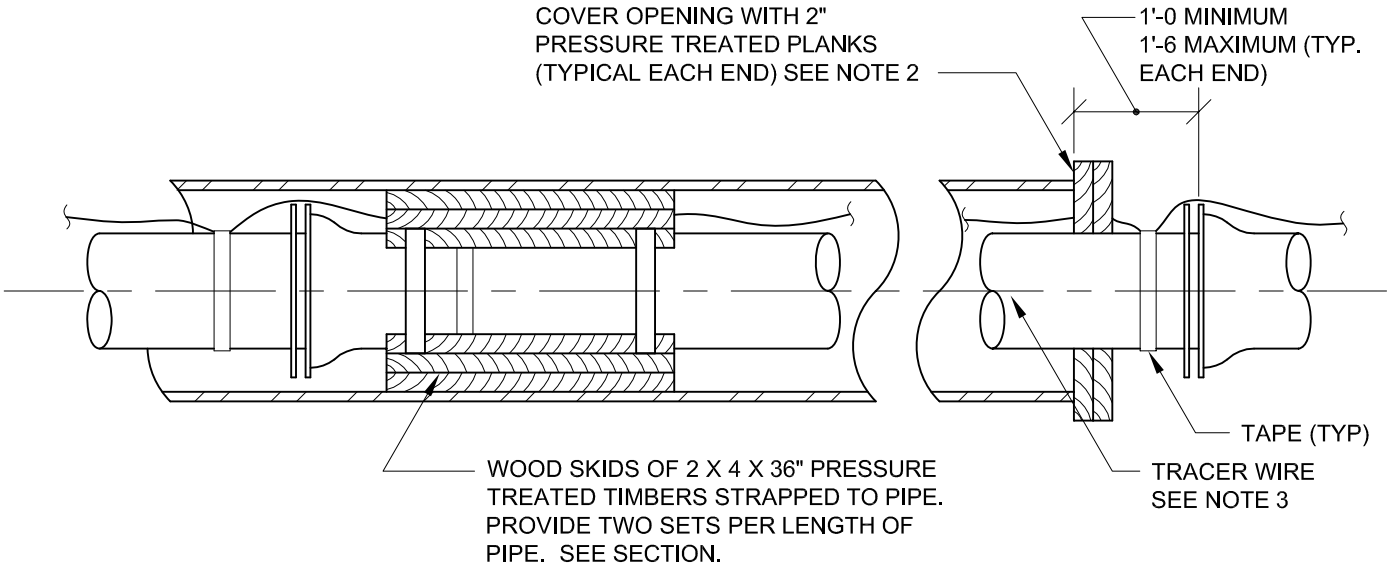

ELEVATION

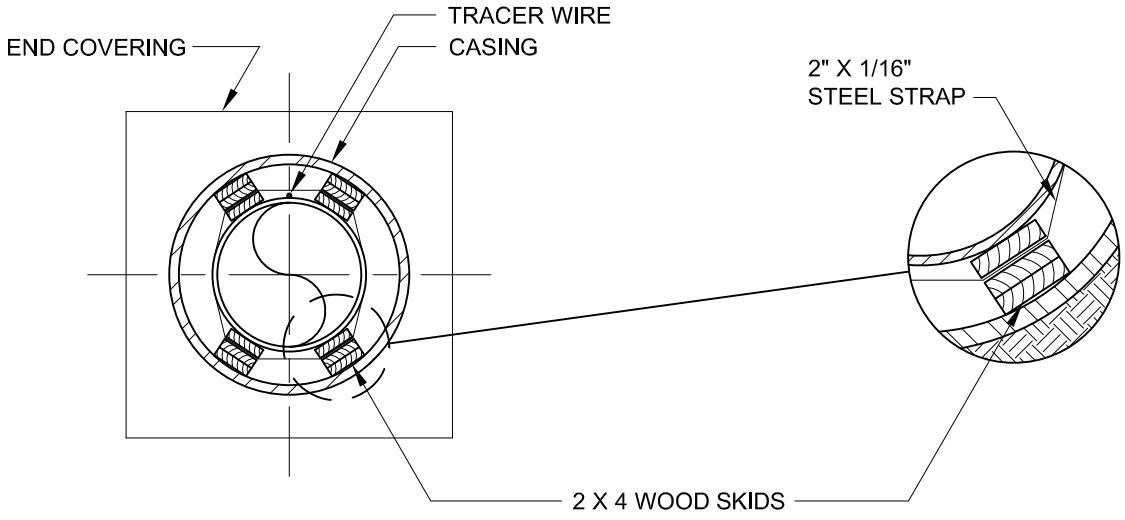

SECTION DETAIL

NOTES:

1. SPACE BETWEEN CASING AND CARRIER PIPE SHALL BE BLOWN FULL WITH DRY SAND OR FILLED W/ SAND SLURRY.
2. ENDS OF CASING SHALL BE SEALED.
3. TRACER WIRE SHALL BE PROVIDED FOR ALL NON-METALLIC PRESSURE SEWER PIPELINES, POTABLE WATER MAINLINES, SEWER LATERALS, PRESSURE SEWER LATERALS, WATER SERVICES, AND ASSOCIATED PIPELINES.

PROJECT STANDARD DETAILS FOR UTILITY CONSTRUCTION

TOWN OF SALEM
UTILITY DISTRICT
KENOSHA COUNTY, WISCONSIN

TITLE CASING INSTALLATION

DRAWN	GD	JOB NO. E121-21.02	DETAIL NO.
CHECKED	CDK	DATE 2/28/08	C-4

J:\Salem\E121-21.02\C-04.dwg, 3/3/2008 2:04:19 PM, 1:1

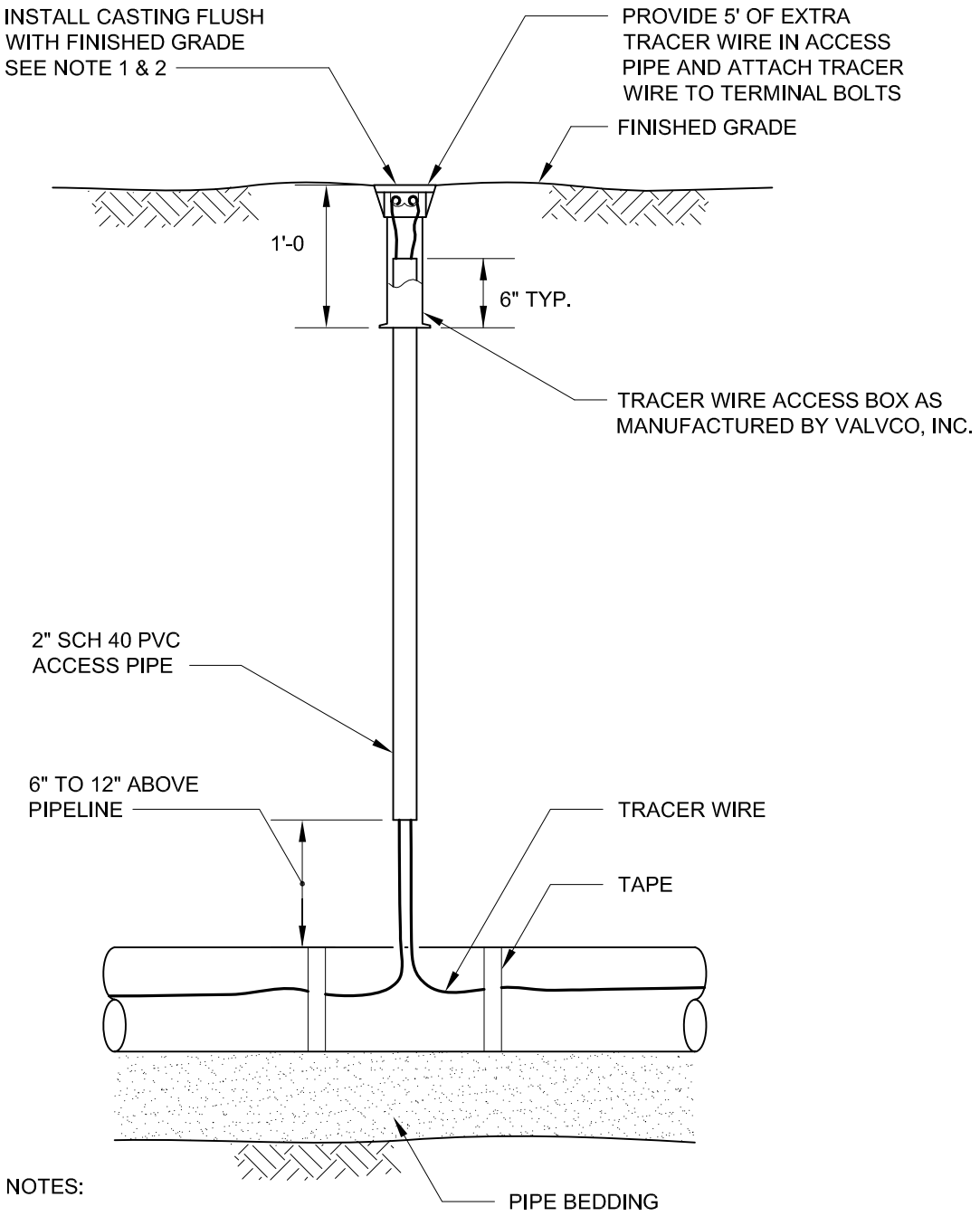

NOTES:

1. PROVIDE NEENAH R-1970 INSPECTION CASTINGS FOR TRACER WIRE ACCESS RISERS LOCATED IN PAVEMENT.

2. TRACER WIRE ACCESS RISERS LOCATED IN DRIVEWAYS OR WITHIN 5'-0" OF DRIVEWAYS SHALL BE PROVIDED WITH 4" MIN X 1'-6" X 1'-6" CONCRETE PAD. THE CONCRETE PAD SHALL BE TO THE TOP OF THE TRACER WIRE ACCESS RISER, OR INSPECTION CASTING.

PROJECT STANDARD DETAILS FOR UTILITY CONSTRUCTION			
TOWN OF SALEM UTILITY DISTRICT KENOSHA COUNTY, WISCONSIN	TITLE TRACER WIRE ACCESS RISER		
	DRAWN GD	JOB NO. E121-21.02	DETAIL NO. C-5
	CHECKED CDK	DATE 2/28/08	

J:\Salem\E121-21.02\C-05.dwg, 3/3/2008 2:04:58 PM, 1:1

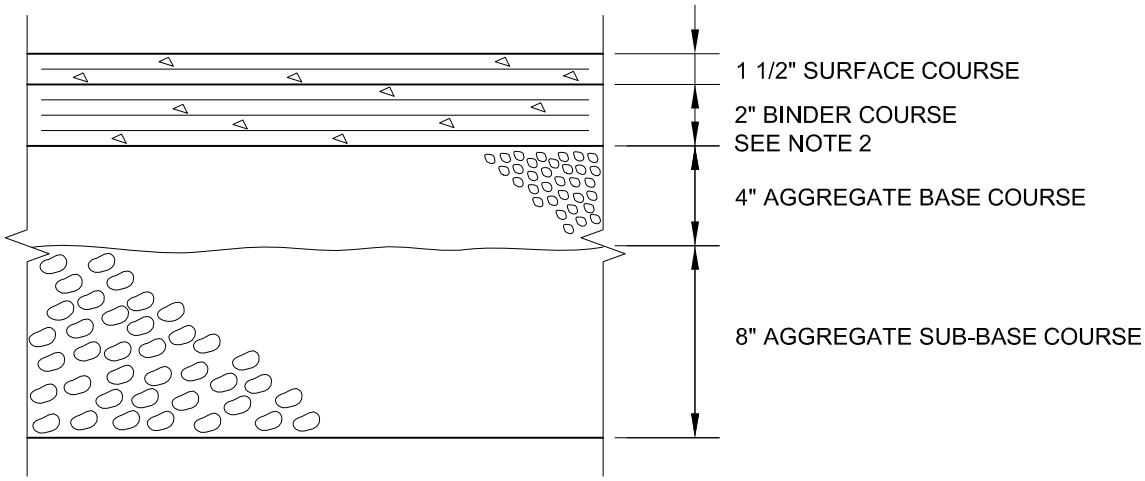

NOTES:

1. TYPE "T" ROADWAY RESTORATION SHALL BE USED TO REPAIR ALL EXISTING PAVED TOWN ROADS. TYPE "T" ROADWAY RESTORATION WITHOUT THE SURFACE COURSE AND BINDER COURSE SHALL BE USED REPAIR ALL EXISTING GRAVEL TOWN ROADS.

2. THE BINDER COURSE ON COLLECTOR STREETS SHALL BE 3 1/2" THICK.

PROJECT STANDARD DETAILS FOR UTILITY CONSTRUCTION			
TOWN OF SALEM UTILITY DISTRICT KENOSHA COUNTY, WISCONSIN	TITLE TYPE "T" ROADWAY RESTORATION		
	DRAWN GD	JOB NO. E121-21.02	DETAIL NO. C-6
	CHECKED CDK	DATE 2/28/08	

J:\Salem\E121-21.02\C-06.dwg, 3/3/2008 2:07:34 PM, 1:1

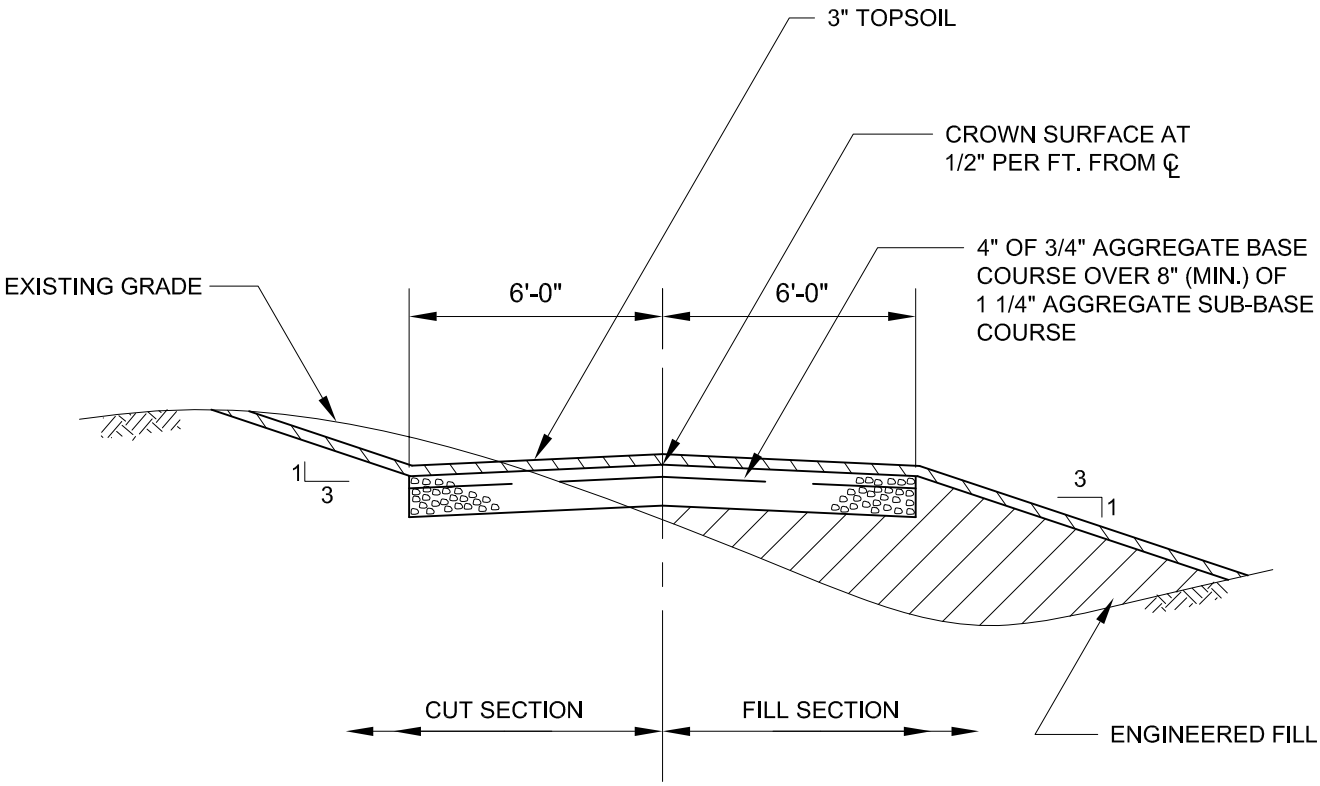

NOTES:

1. ENGINEERED FILL SHALL BE USED IN FILL AND TRANSITION SECTIONS TO ATTAIN REQUIRED GRADE.
2. SLOPE SUBGRADE IN CUT AND TRANSITION AREAS 1/2" PER FT. FROM ℄ OF ACCESS PAD.
3. SLOPE SUBGRADE IN FILL AREA 1/2" PER FT. (MIN.) DOWN SLOPE.
4. SCARIFY AND COMPACT TOP 6" OF SUBGRADE TO 95% OF MAXIMUM DRY DENSITY.
5. THE CENTERLINE OF ACCESS PADS SHALL HAVE A MIN. HORIZONTAL CURVE OF 50 FEET. A HORIZONTAL CURVE SHALL BE PROVIDED AT POINT OF INTERSECTIONS. ACCESS PADS SHALL HAVE A MAXIMUM GRADE OF 10 PERCENT.

PROJECT
STANDARD DETAILS FOR UTILITY CONSTRUCTION

TOWN OF SALEM
UTILITY DISTRICT
KENOSHA COUNTY, WISCONSIN

TITLE
ACCESS PAD

DRAWN GD	JOB NO. E121-21.02	DETAIL NO.
CHECKED JW	DATE 2/28/08	C-7

J:\Salem\E121-21.02\C-07.dwg, 3/3/2008 2:05:59 PM, 1:1

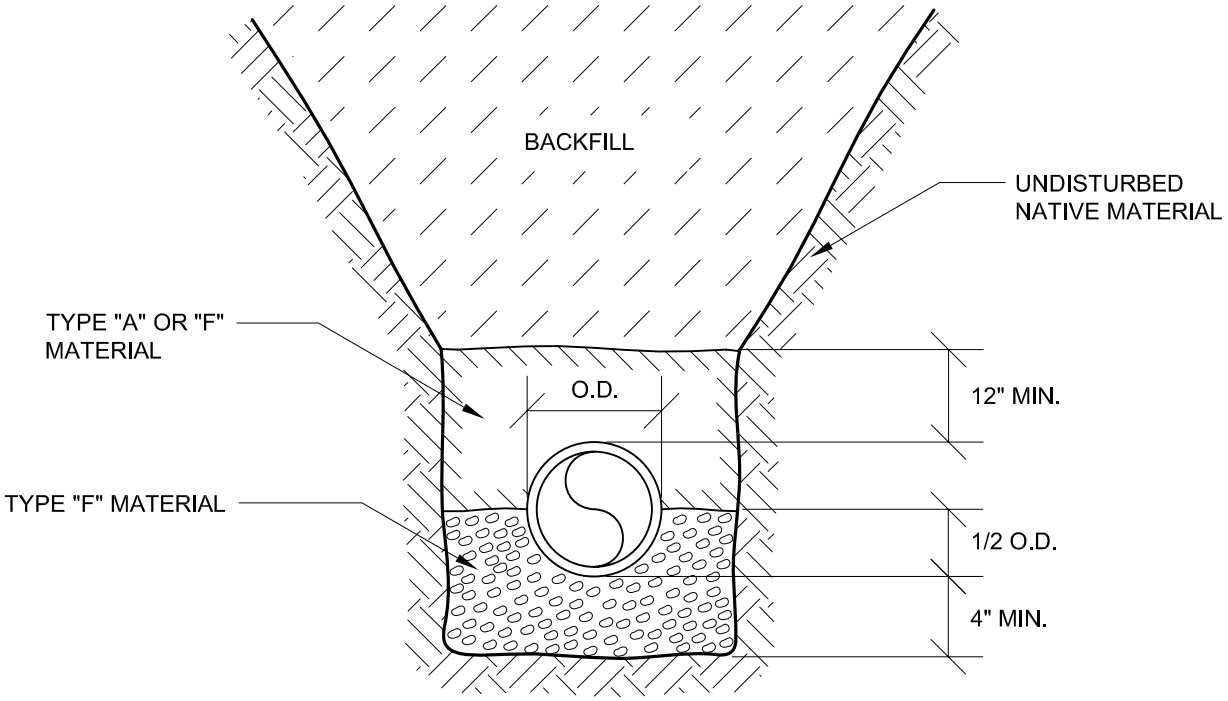

PROJECT

STANDARD DETAILS FOR SANITARY SEWER CONSTRUCTION

TOWN OF SALEM
UTILITY DISTRICT
KENOSHA COUNTY, WISCONSIN

TITLE

SANITARY SEWER BEDDING

DRAWN	GD	JOB NO. E121-21.02	DETAIL NO.
CHECKED	CDK	DATE 2/28/08	S-1

J:\Salem\E121-21.02\S-01.dwg, 3/3/2008 2:06:42 PM, 1:1

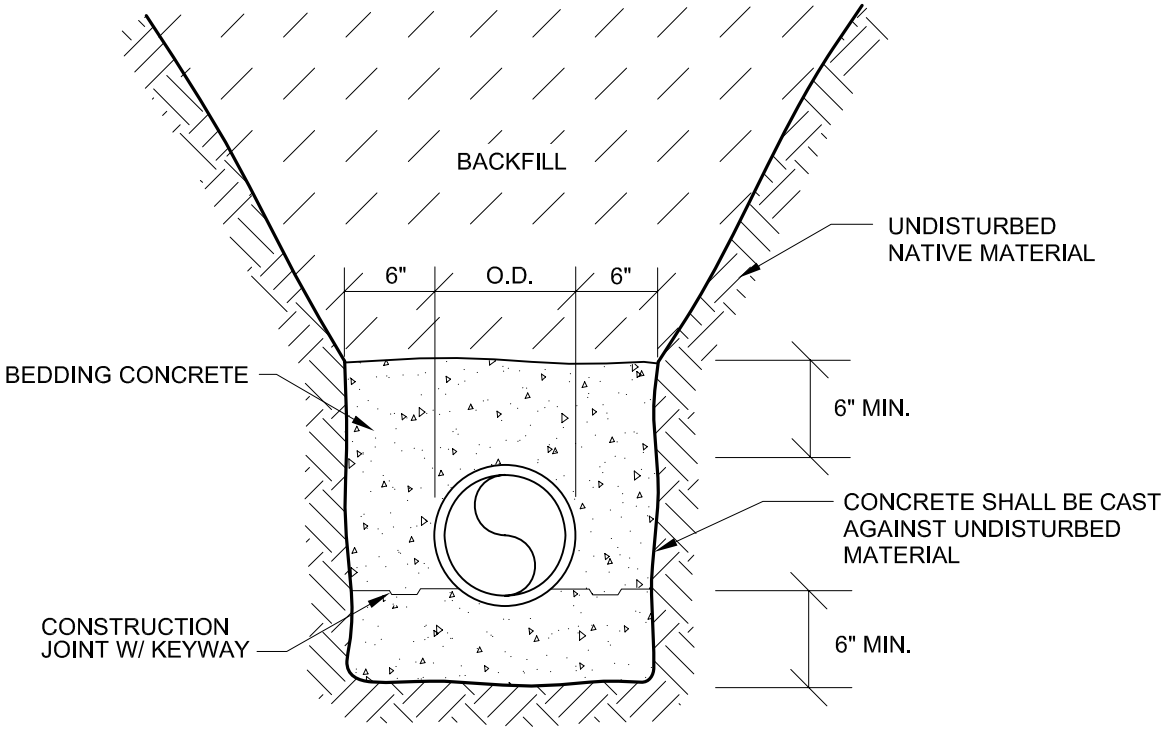

PROJECT STANDARD DETAILS FOR SANITARY SEWER CONSTRUCTION			
TOWN OF SALEM UTILITY DISTRICT KENOSHA COUNTY, WISCONSIN	TITLE CONCRETE ENCASEMENT		
	DRAWN GD	JOB NO. E121-21.02	DETAIL NO.
	CHECKED CDK	DATE 2/28/08	S-2

J:\Salem\E121-21.02\S-02.dwg, 3/3/2008 2:08:16 PM, 1:1

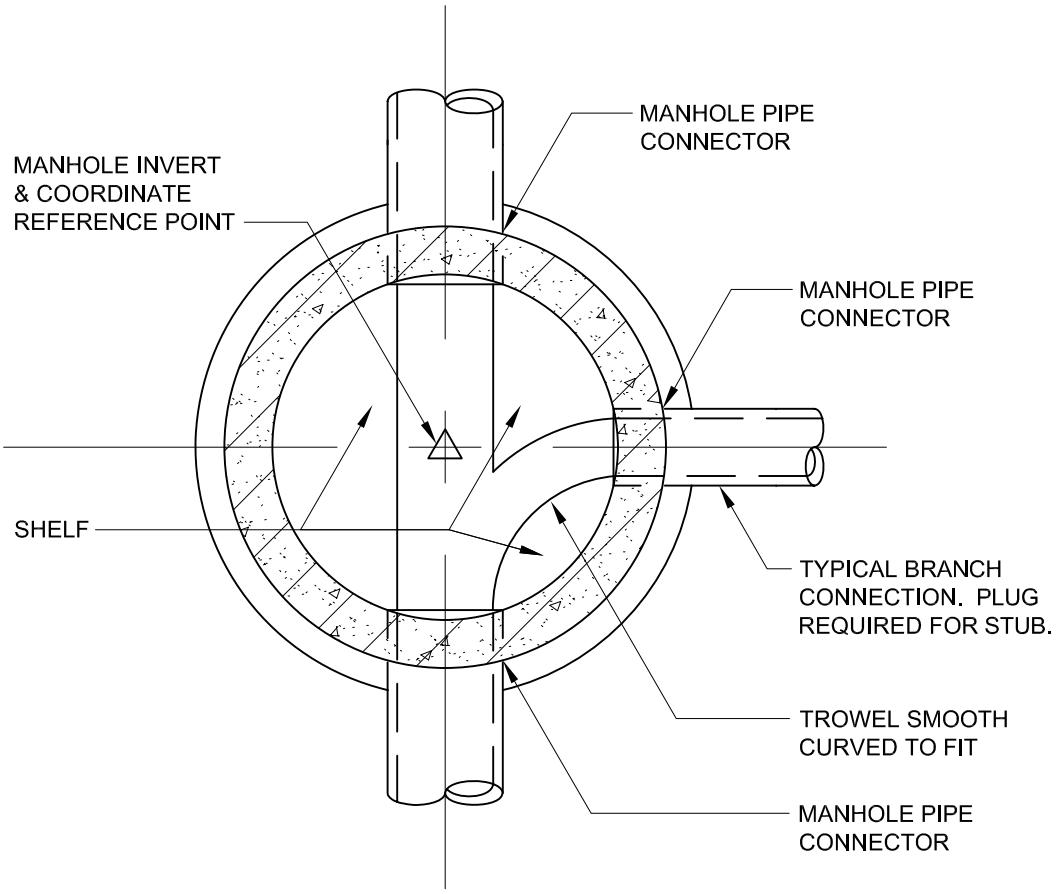

PROJECT STANDARD DETAILS FOR SANITARY SEWER CONSTRUCTION			
TOWN OF SALEM UTILITY DISTRICT KENOSHA COUNTY, WISCONSIN	TITLE TYPICAL MANHOLE BASE PLAN		
	DRAWN GD	JOB NO. E121-21.02	DETAIL NO.
	CHECKED CDK	DATE 2/28/08	S-3

J:\Salem\E121-21.02\S-03.dwg, 3/3/2008 2:09:07 PM, 1:1

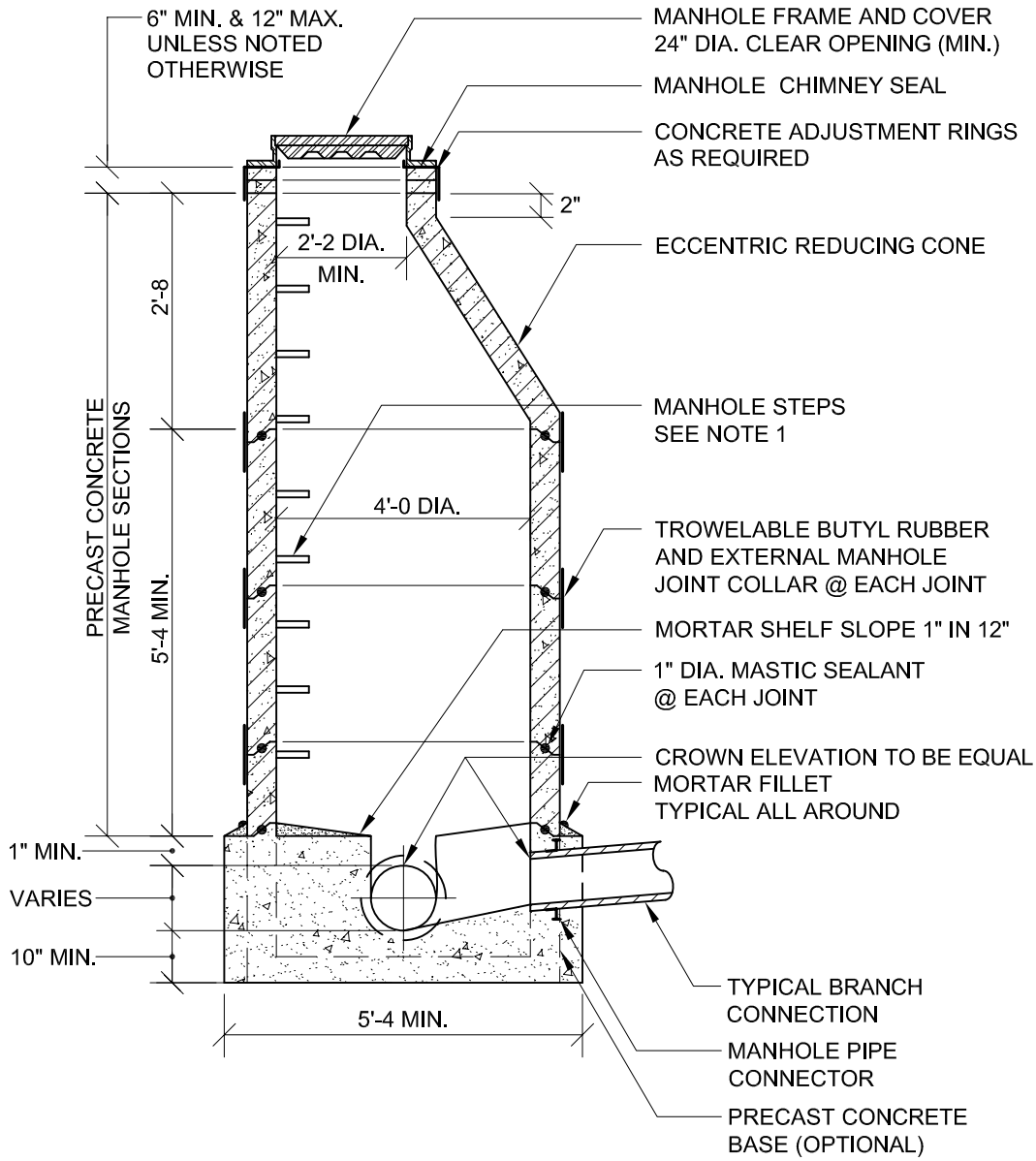

NOTE:

1. THE STEPS SHALL BE LOCATED OVER THE BENCH.

PROJECT	STANDARD DETAILS FOR SANITARY SEWER CONSTRUCTION			
TOWN OF SALEM UTILITY DISTRICT KENOSHA COUNTY, WISCONSIN	TITLE STANDARD MANHOLE			
	DRAWN GD	JOB NO. E121-21.02		DETAIL NO.
	CHECKED CDK	DATE 2/28/08		S-4

J:\Salem\E121-21.02\S-04.dwg, 3/3/2008 2:09:50 PM, 1:1

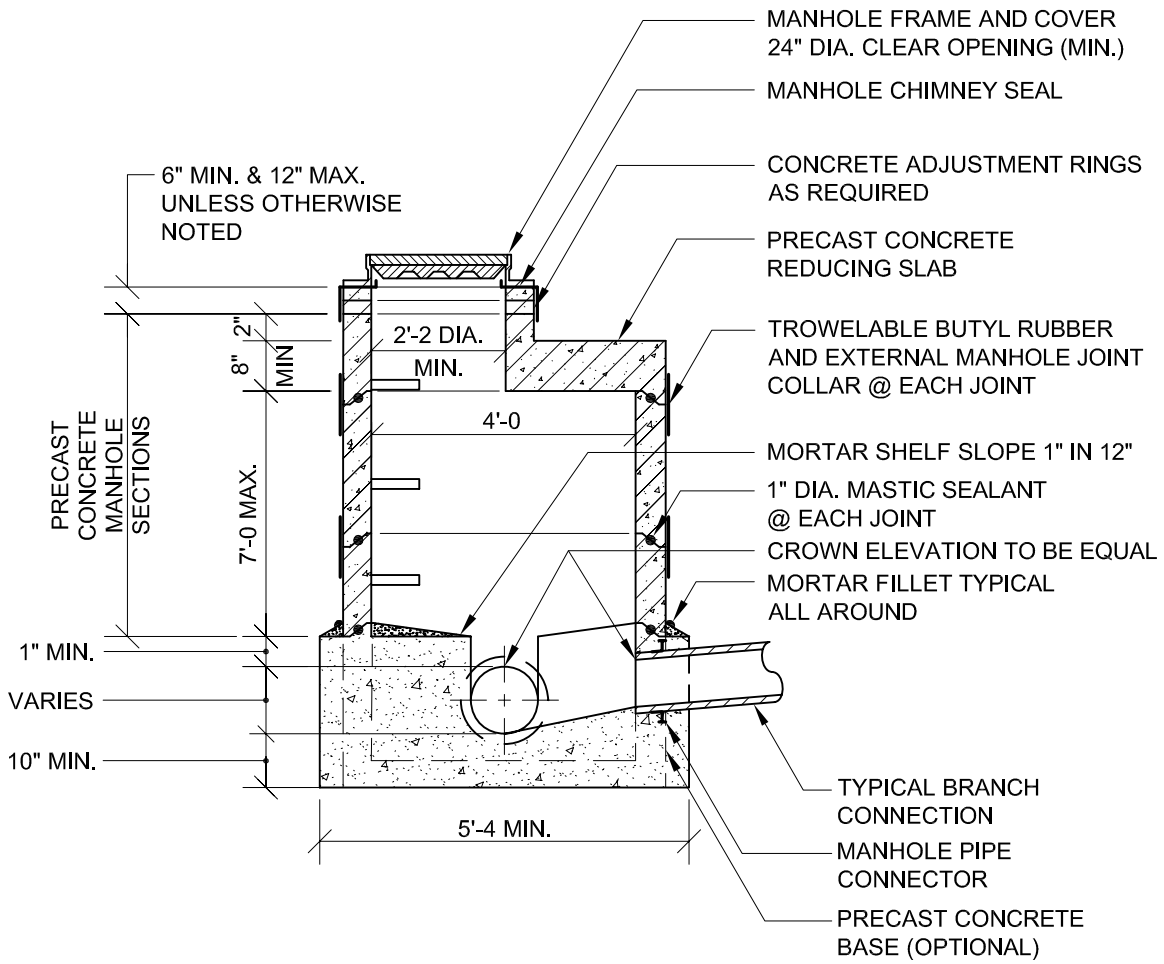

NOTE:

1. THE STEPS SHALL BE LOCATED OVER THE BENCH.

PROJECT STANDARD DETAILS FOR SANITARY SEWER CONSTRUCTION			
TOWN OF SALEM UTILITY DISTRICT KENOSHA COUNTY, WISCONSIN	TITLE LOW HEADROOM MANHOLE		
	DRAWN GD	JOB NO. E121-21.02	DETAIL NO. S-5
	CHECKED CDK	DATE 2/28/08	

J:\Salem\E121-21.02\S-05.dwg, 3/3/2008 2:10:28 PM, 1:1

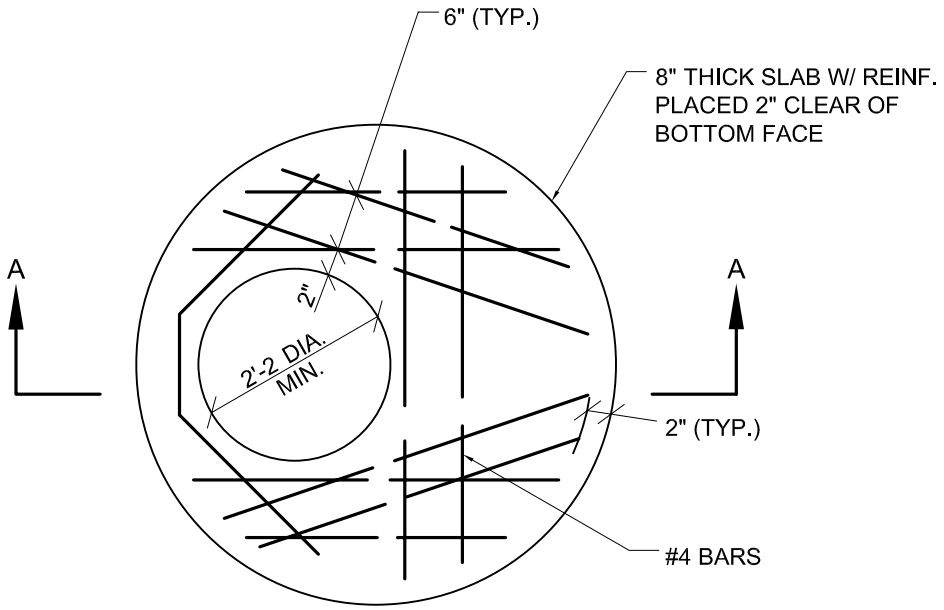

PLAN

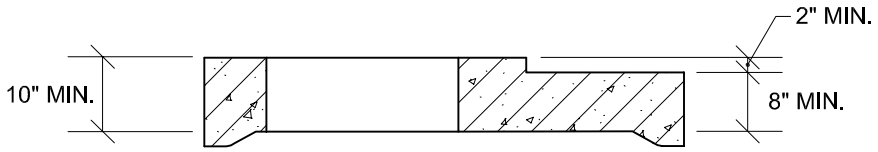

SECTION A-A

PROJECT

STANDARD DETAILS FOR SANITARY SEWER CONSTRUCTION

TOWN OF SALEM
UTILITY DISTRICT
KENOSHA COUNTY, WISCONSIN

TITLE

48" TO 26" REDUCING SLAB

DRAWN	GD	JOB NO. E121-21.02	DETAIL NO.
CHECKED	CDK	DATE 2/28/08	S-6

J:\Salem\E121-21.02\S-06.dwg, 3/3/2008 2:11:01 PM, 1:1

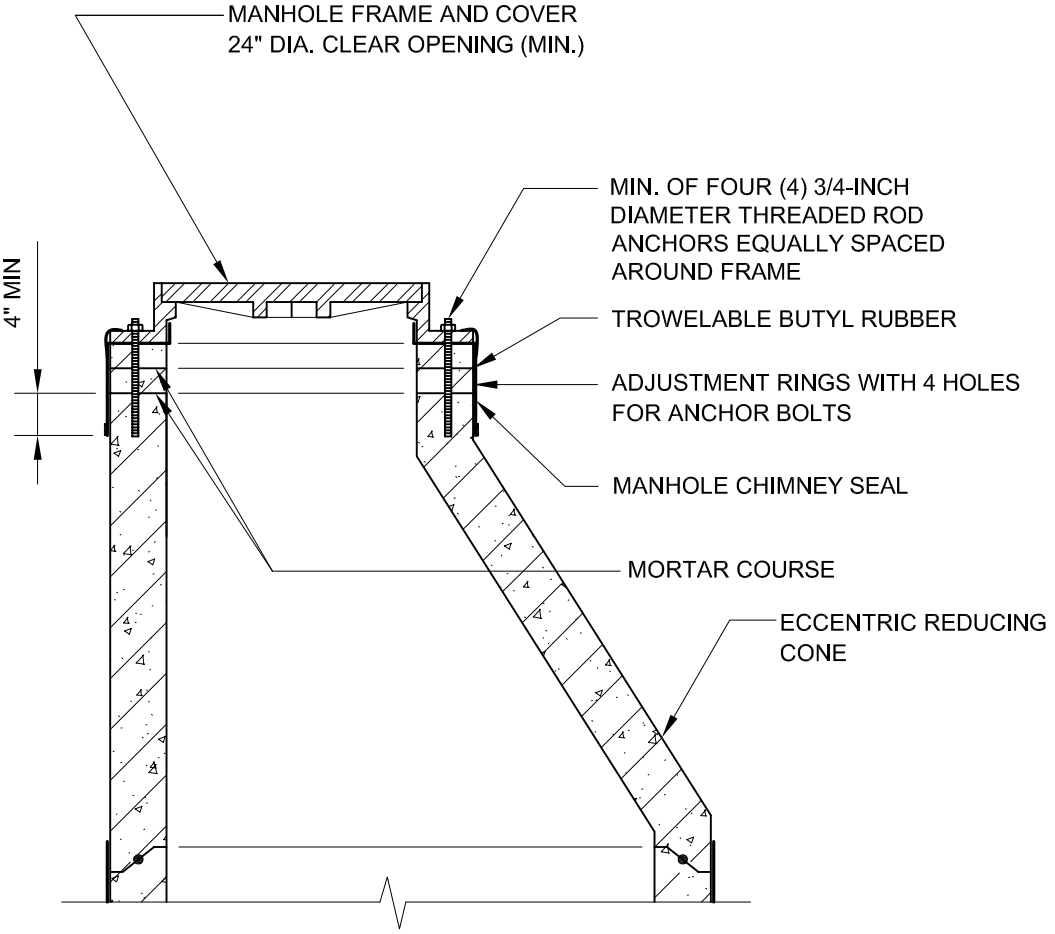

NOTES:

1. ANCHORED MANHOLE FRAME & COVER SHALL BE USED FOR ALL MANHOLES THAT ARE NOT LOCATED IN PAVED AREAS.
2. THREADED ROD, NUTS AND WASHERS SHALL BE AISI TYPE 304 S.S.
3. THREADED ROD SHALL BE SET IN EPOXY ADHESIVE.

PROJECT STANDARD DETAILS FOR SANITARY SEWER CONSTRUCTION			
TOWN OF SALEM UTILITY DISTRICT KENOSHA COUNTY, WISCONSIN	TITLE ANCHORED MANHOLE FRAME & COVER		
	DRAWN GD	JOB NO. E121-21.02	DETAIL NO. S-7
	CHECKED CDK	DATE 2/28/08	

J:\Salem\E121-21.02\S-07.dwg, 3/3/2008 2:11:32 PM, 1:1

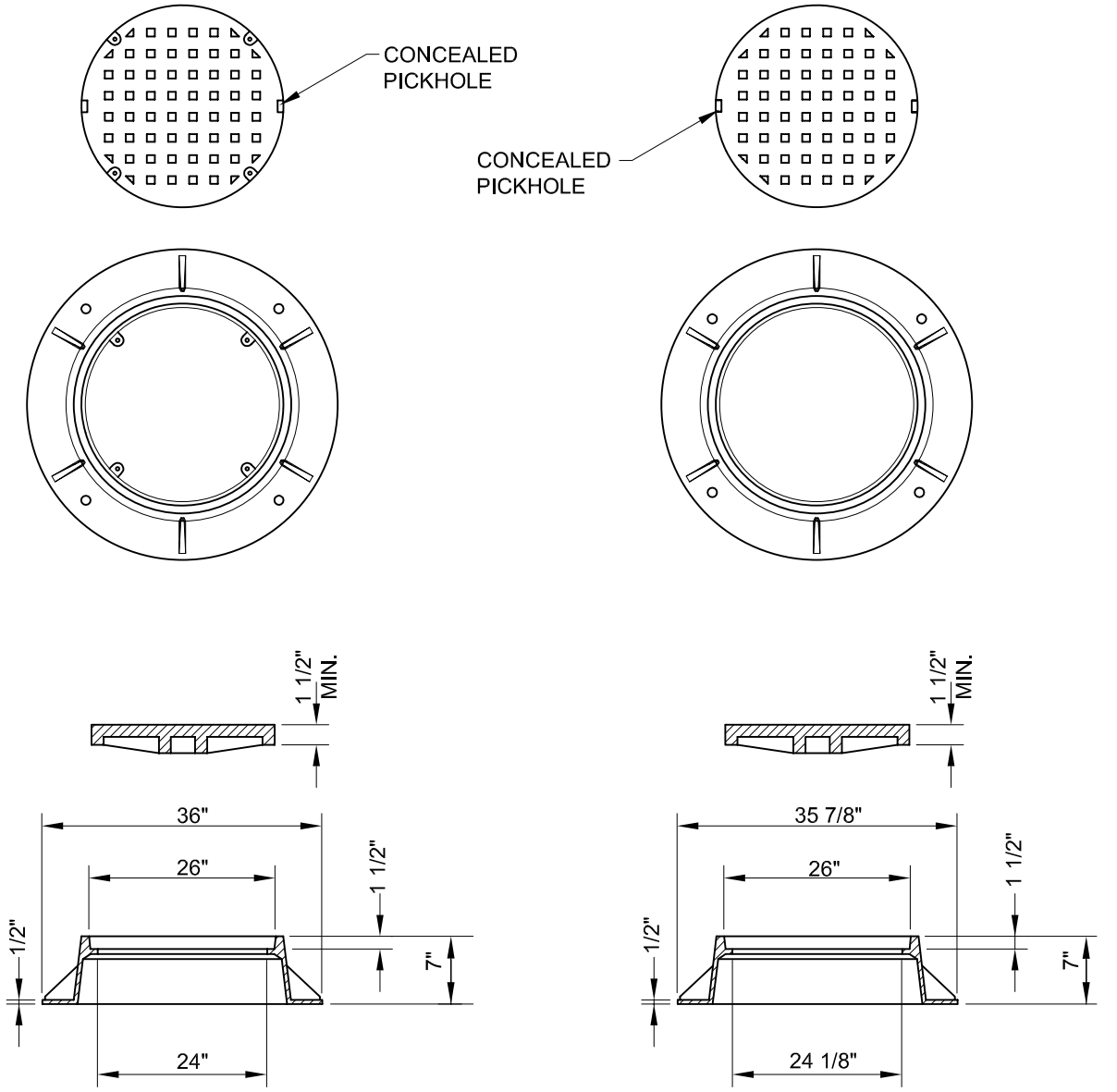

NON-TRAFFIC AREA
TYPE 1 FRAME & COVER

NEENAH R-1916-F OR EQUAL

TRAFFIC AREA
TYPE 2 FRAME & COVER

NEENAH R-1642 OR EQUAL

PROJECT

STANDARD DETAILS FOR SANITARY SEWER CONSTRUCTION

TOWN OF SALEM
UTILITY DISTRICT
KENOSHA COUNTY, WISCONSIN

TITLE

MANHOLE CASTINGS

DRAWN	GD	JOB NO. E121-21.02	DETAIL NO.
CHECKED	CDK	DATE 2/28/08	S-8

J:\Salem\E121-21.02\S-08.dwg, 3/3/2008 2:12:07 PM, 1:1

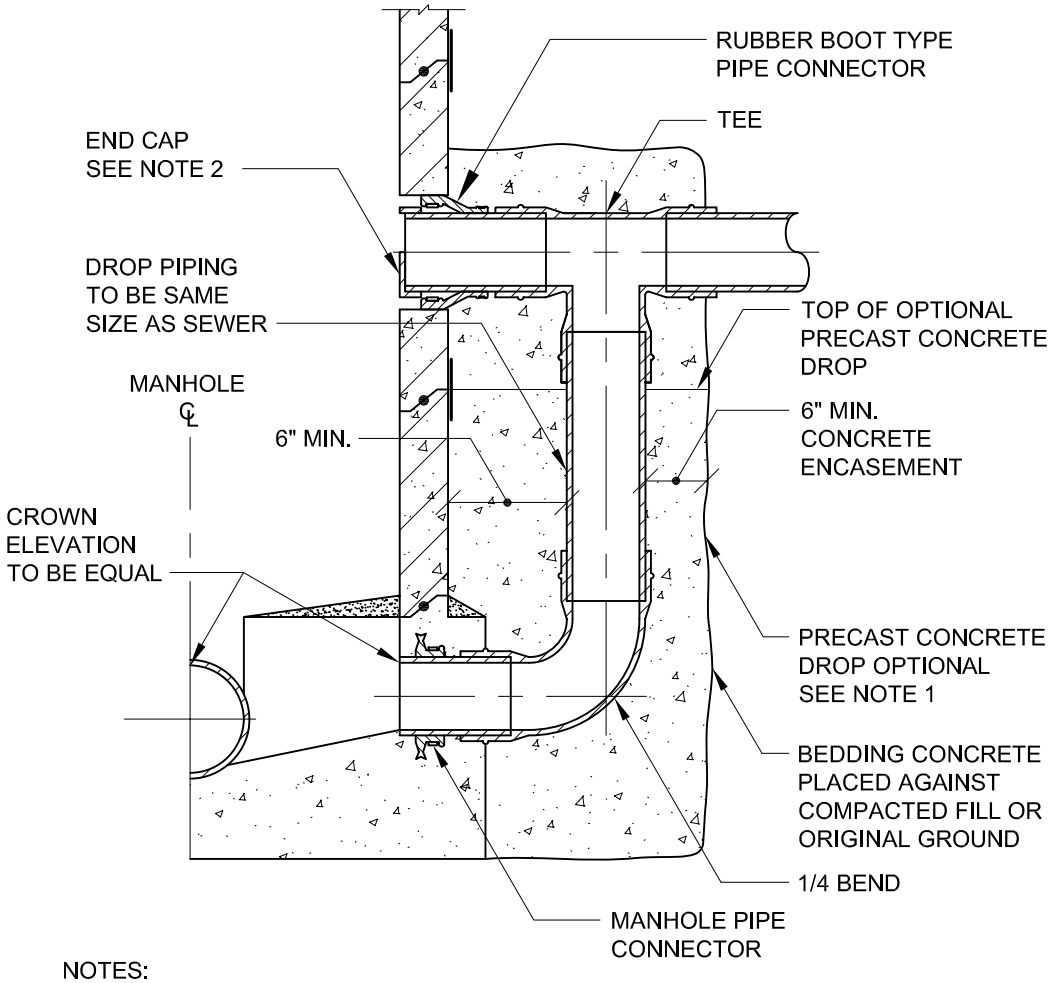

NOTES:

1. ANNULAR SPACE BETWEEN PIPE AND PRECAST CONCRETE SHALL BE FILLED WITH GROUT.

2. END CAP SHALL BE A SOLVENT WELD CAP. REMOVE TOP HALF OF VERTICAL PLATE ON CAP. CAP SHALL NOT BE SOLVENT WELDED TO PIPE.

PROJECT STANDARD DETAILS FOR SANITARY SEWER CONSTRUCTION			
TOWN OF SALEM UTILITY DISTRICT KENOSHA COUNTY, WISCONSIN	TITLE STANDARD DROP MANHOLE 8"-15" (INCLUSIVE)		
	DRAWN GD	JOB NO. E121-21.02	DETAIL NO.
	CHECKED CDK	DATE 2/28/08	S-9

J:\Salem\E121-21.02\S-09.dwg, 3/3/2008 2:12:42 PM, 1:1

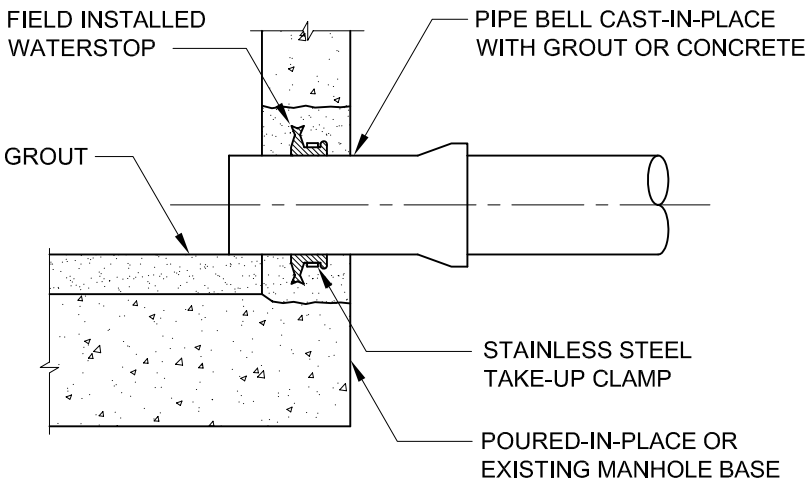

NOTE: OPENING SHALL BE MINIMUM OF 4-INCHES LARGER THAN THE OUTSIDE DIAMETER OF WATERSTOP.

POURED-IN-PLACE MANHOLE CONNECTION

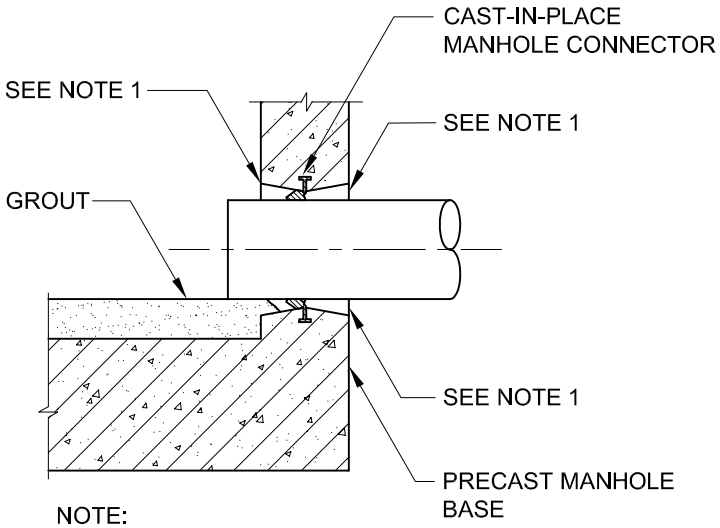

NOTE:

1. DO NOT GROUT.

PRECAST MANHOLE CONNECTION

PROJECT STANDARD DETAILS FOR SANITARY SEWER CONSTRUCTION			
TOWN OF SALEM UTILITY DISTRICT KENOSHA COUNTY, WISCONSIN	TITLE MANHOLE CONNECTIONS - 1		
	DRAWN GD	JOB NO. E121-21.02	DETAIL NO.
	CHECKED CDK	DATE 2/28/08	S-10

J:\Salem\E121-21.02\S-10.dwg, 3/3/2008 2:13:23 PM, 1:2

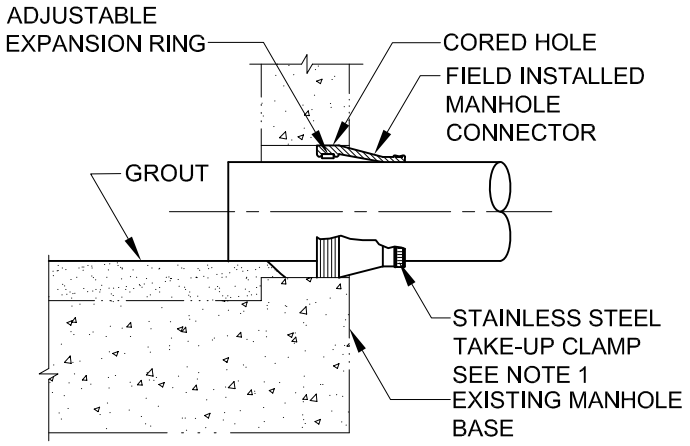

NOTE:

1. TWO TAKE-UP CLAMPS SHALL BE USED ON PIPES LARGER THAN 10-INCH.

EXISTING MANHOLE CONNECTION

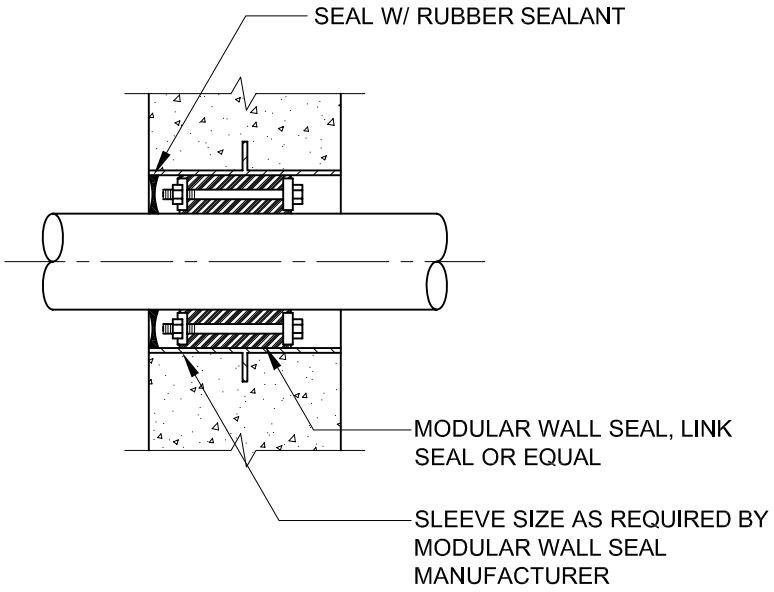

PRESSURE SEWER MANHOLE CONNECTION

PROJECT STANDARD DETAILS FOR SANITARY SEWER CONSTRUCTION			
TOWN OF SALEM UTILITY DISTRICT KENOSHA COUNTY, WISCONSIN	TITLE MANHOLE CONNECTIONS - 2		
	DRAWN GD	JOB NO. E121-21.02	DETAIL NO.
	CHECKED CDK	DATE 2/28/08	S-11

J:\Salem\E121-21.02\S-11.dwg, 3/3/2008 2:13:56 PM, 1:2

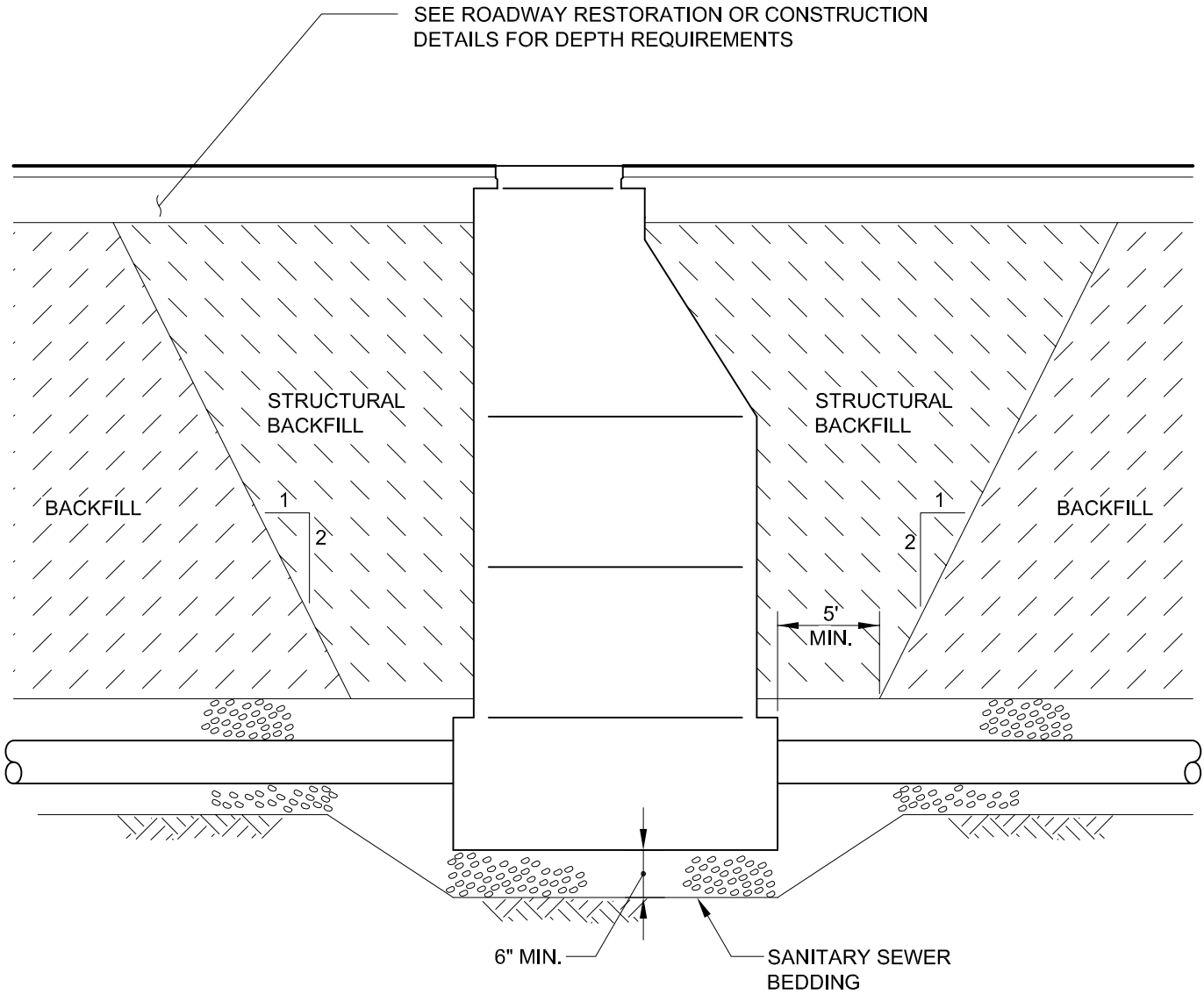

NOTES:

1. STRUCTURAL BACKFILL SHALL BE PLACED AROUND ALL MANHOLES.
2. SANITARY SEWER BEDDING MATERIAL MAY BE USED FOR STRUCTURAL BACKFILL.

PROJECT STANDARD DETAILS FOR SANITARY SEWER CONSTRUCTION			
TOWN OF SALEM UTILITY DISTRICT KENOSHA COUNTY, WISCONSIN	TITLE MANHOLE BACKFILL		
	DRAWN GD	JOB NO. E121-21.02	DETAIL NO. S-12
	CHECKED CDK	DATE 2/28/08	

J:\Salem\E121-21.02\S-12.dwg, 3/3/2008 2:14:34 PM, 1:1

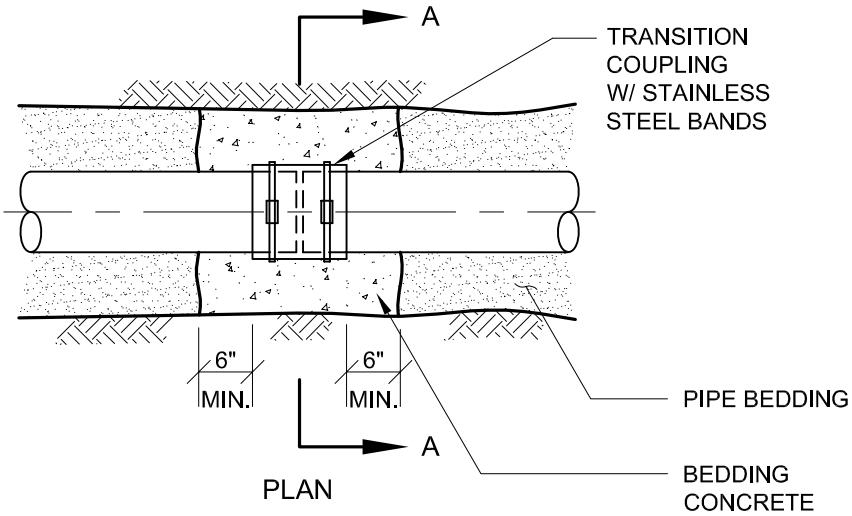

PLAN

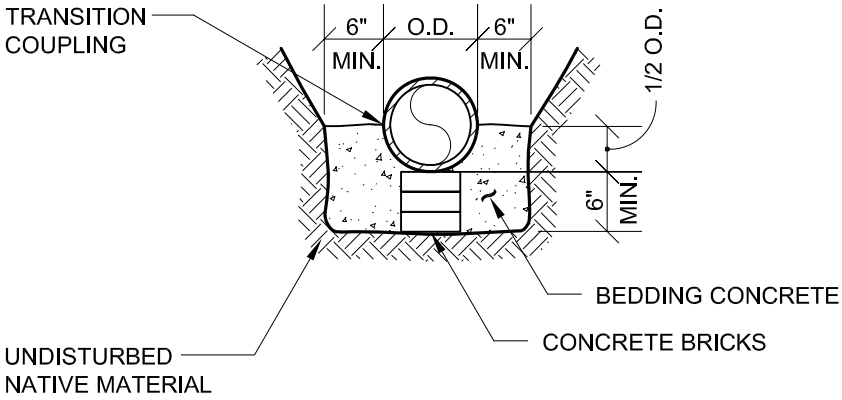

SECTION A-A

NOTE: EACH PIPE SHALL BE SUPPORTED W/ CONCRETE BRICKS SO THE INVERT OF THE NEW PIPE MATCHES THE INVERT OF THE EXISTING PIPE.

PROJECT STANDARD DETAILS FOR SANITARY SEWER CONSTRUCTION			
TOWN OF SALEM UTILITY DISTRICT KENOSHA COUNTY, WISCONSIN	TITLE TRANSITION COUPLING		
	DRAWN GD	JOB NO. E121-21.02	DETAIL NO.
	CHECKED CDK	DATE 2/28/08	S-13

J:\Salem\E121-21.02\S-13.dwg, 3/3/2008 2:15:08 PM, 1:1

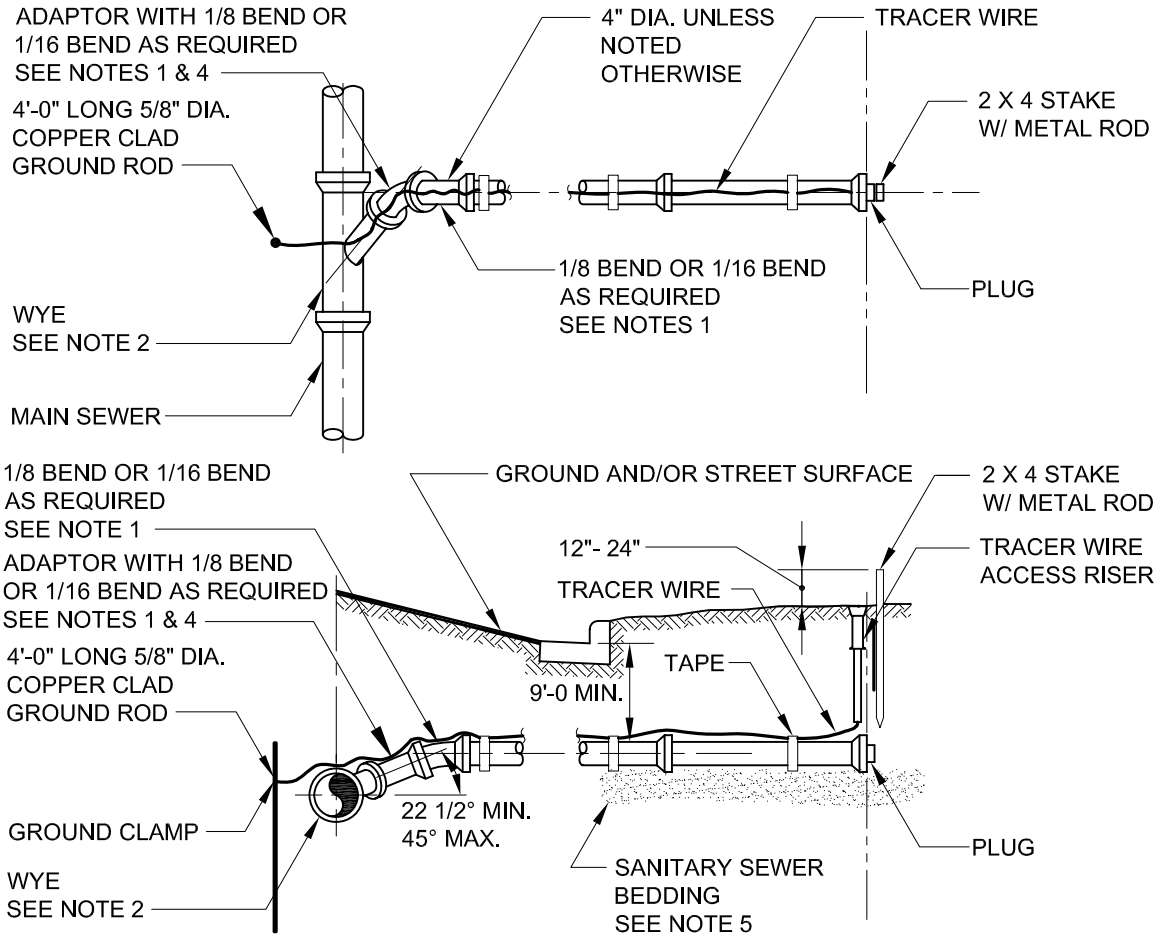

NOTES:

1. INVERT OF SEWER LATERAL AT VERTICAL BEND TO BE NO LOWER THAN CROWN OF SEWER UNLESS A SHALLOW LATERAL IS REQUIRED.
2. A WYE WITH AN 1/8 BEND SHALL BE USED ON SHALLOW LATERALS EXTENDING HORIZONTALLY FROM THE MAIN SEWER.
3. MINIMUM SLOPE SHALL BE 1/8 INCH PER FOOT.
4. PROVIDE ADAPTOR FITTING WITH A SDR 35 SPIGOT AND A SCH. 40 DWV SOLVENT WELD HUB WHEN SCH. 40 DWV LATERAL PIPE IS PROVIDED.
5. SEWER LATERALS WITH A SLOPE GREATER THAN 10 PERCENT SHALL BE INSTALLED WITH A CONCRETE CRADLE IN ACCORDANCE WITH DETAIL S-15.

PROJECT
STANDARD DETAILS FOR SANITARY SEWER CONSTRUCTION

TOWN OF SALEM
UTILITY DISTRICT
KENOSHA COUNTY, WISCONSIN

TITLE
STANDARD SEWER LATERAL-SSL

DRAWN GD	JOB NO. E121-21.02	DETAIL NO.
CHECKED CDK	DATE 2/28/08	S-14

J:\Salem\E121-21.02\S-14.dwg, 3/3/2008 2:15:41 PM, 1:1

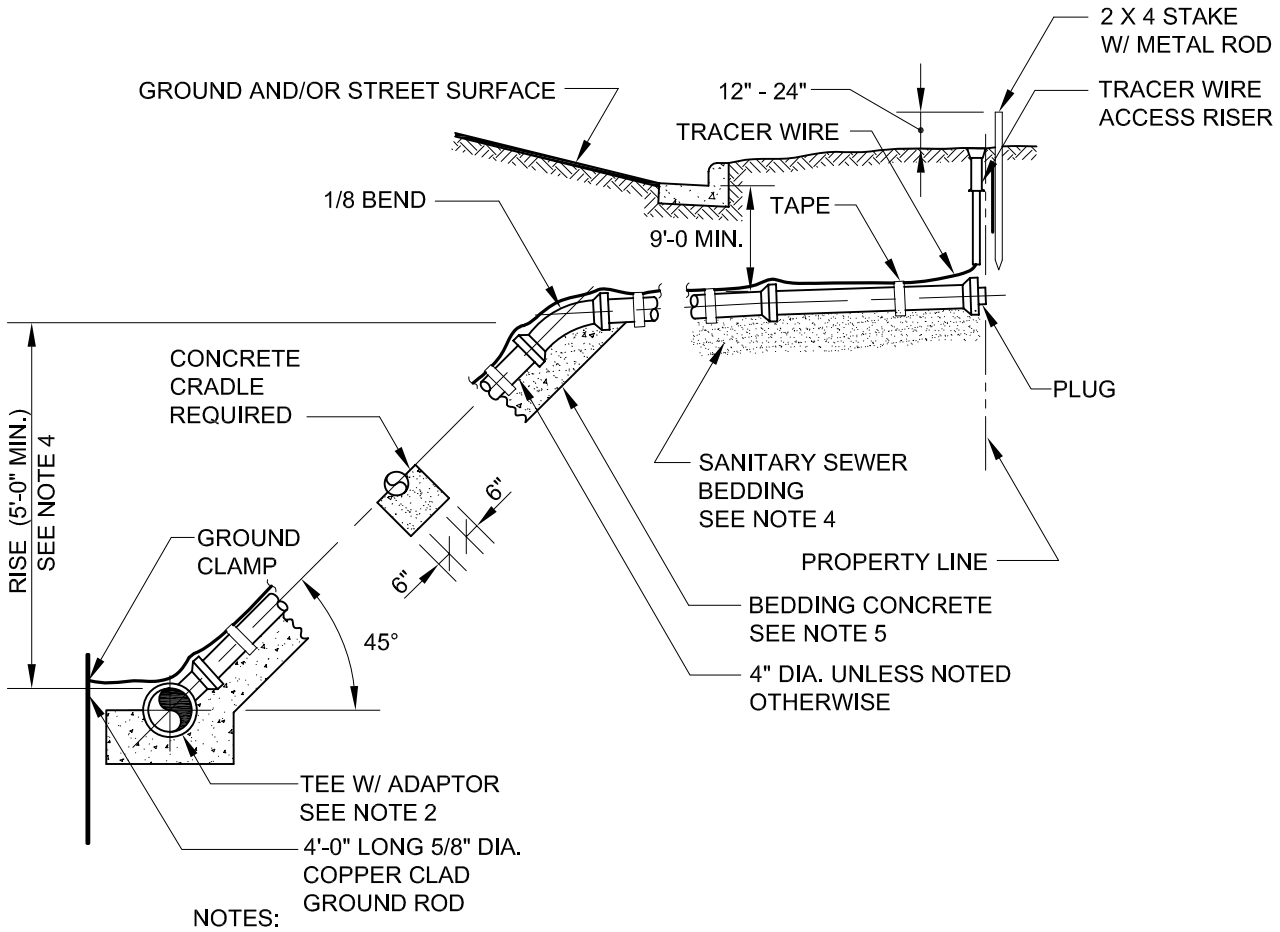

NOTES:

1. MINIMUM SLOPE SHALL BE 1/4 INCH PER FOOT.
2. PROVIDE ADAPTOR FITTING WITH A SDR 35 SPIGOT AND A SCH. 40 DWV SOLVENT WELD HUB WHEN SCH. 40 DWV LATERAL PIPE IS PROVIDED.
3. IF THE PROPOSED RISE IS LESS THAN 5'-0", A STANDARD SEWER LATERAL SHALL BE USED WITH A STEEPER SLOPE.
4. SEWER LATERALS WITH A SLOPE GREATER THAN 10 PERCENT SHALL BE INSTALLED WITH A CONCRETE CRADLE.
5. CONCRETE BEDDING SHALL BE A MINIMUM OF 6" THICK. THE WIDTH OF THE CONCRETE BEDDING SHALL BE 12" PLUS THE OUTSIDE DIAMETER OF THE PIPE.

PROJECT

STANDARD DETAILS FOR SANITARY SEWER CONSTRUCTION

TOWN OF SALEM
UTILITY DISTRICT
KENOSHA COUNTY, WISCONSIN

TITLE

DEEP SEWER LATERAL-DSL

DRAWN	GD	JOB NO. E121-21.02	DETAIL NO.
CHECKED	CDK	DATE 2/28/08	S-15

J:\Salem\E121-21.02\S-15.dwg, 3/3/2008 2:16:22 PM, 1:1

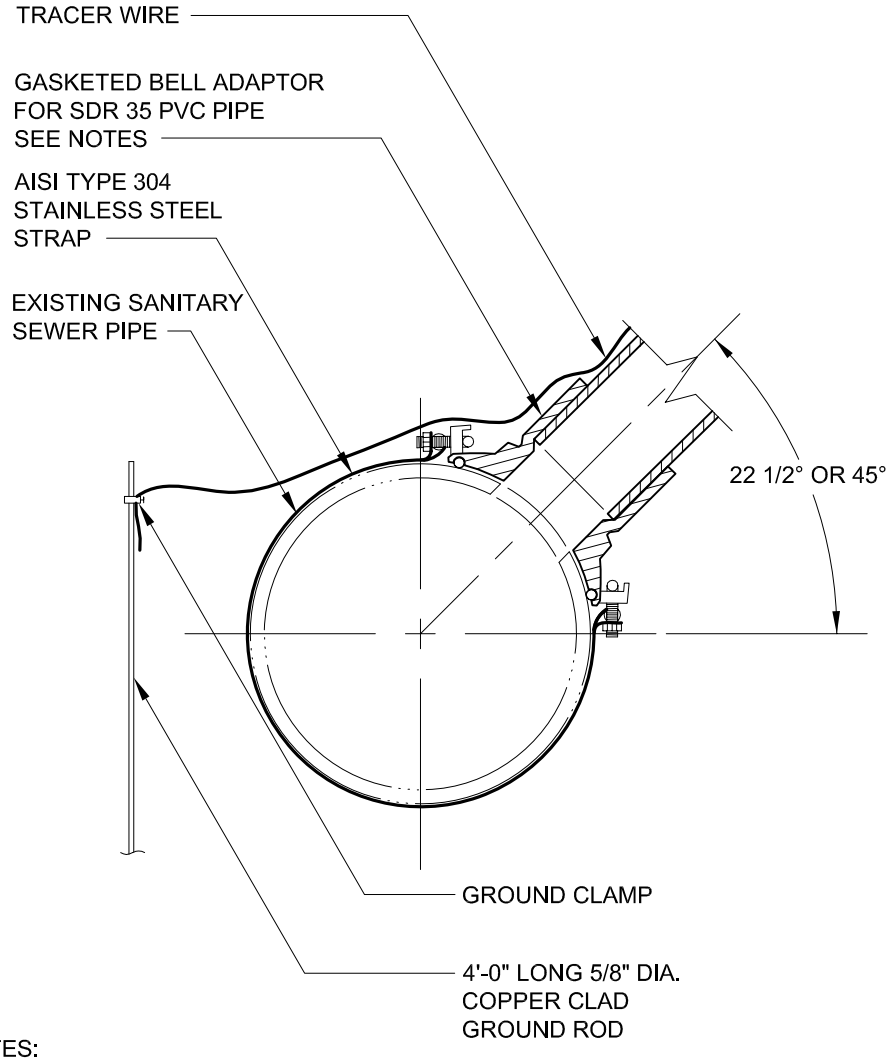

NOTES:

1. THE SADDLE FOR LATERAL CONNECTIONS SHALL BE A TEE SADDLE UNLESS A SHALLOW LATERAL IS REQUIRED.

2. A WYE SADDLE WITH AN 1/8" BEND SHALL BE USED ON SHALLOW LATERALS EXTENDING HORIZONTALLY FROM THE MAIN SEWER.

3. PROVIDE ADAPTOR FITTING WITH A SDR 35 SPIGOT AND A SCH. 40 DWV SOLVENT WELD HUB WHEN SCH. 40 DWV LATERAL PIPE IS PROVIDED.

PROJECT STANDARD DETAILS FOR SANITARY SEWER CONSTRUCTION			
TOWN OF SALEM UTILITY DISTRICT KENOSHA COUNTY, WISCONSIN	TITLE SEWER LATERAL SADDLE CONNECTION		
	DRAWN GD	JOB NO. E121-21.02	DETAIL NO. S-16
	CHECKED CDK	DATE 2/28/08	

J:\Salem\E121-21.02\S-16.dwg, 3/3/2008 2:17:02 PM, 1:1

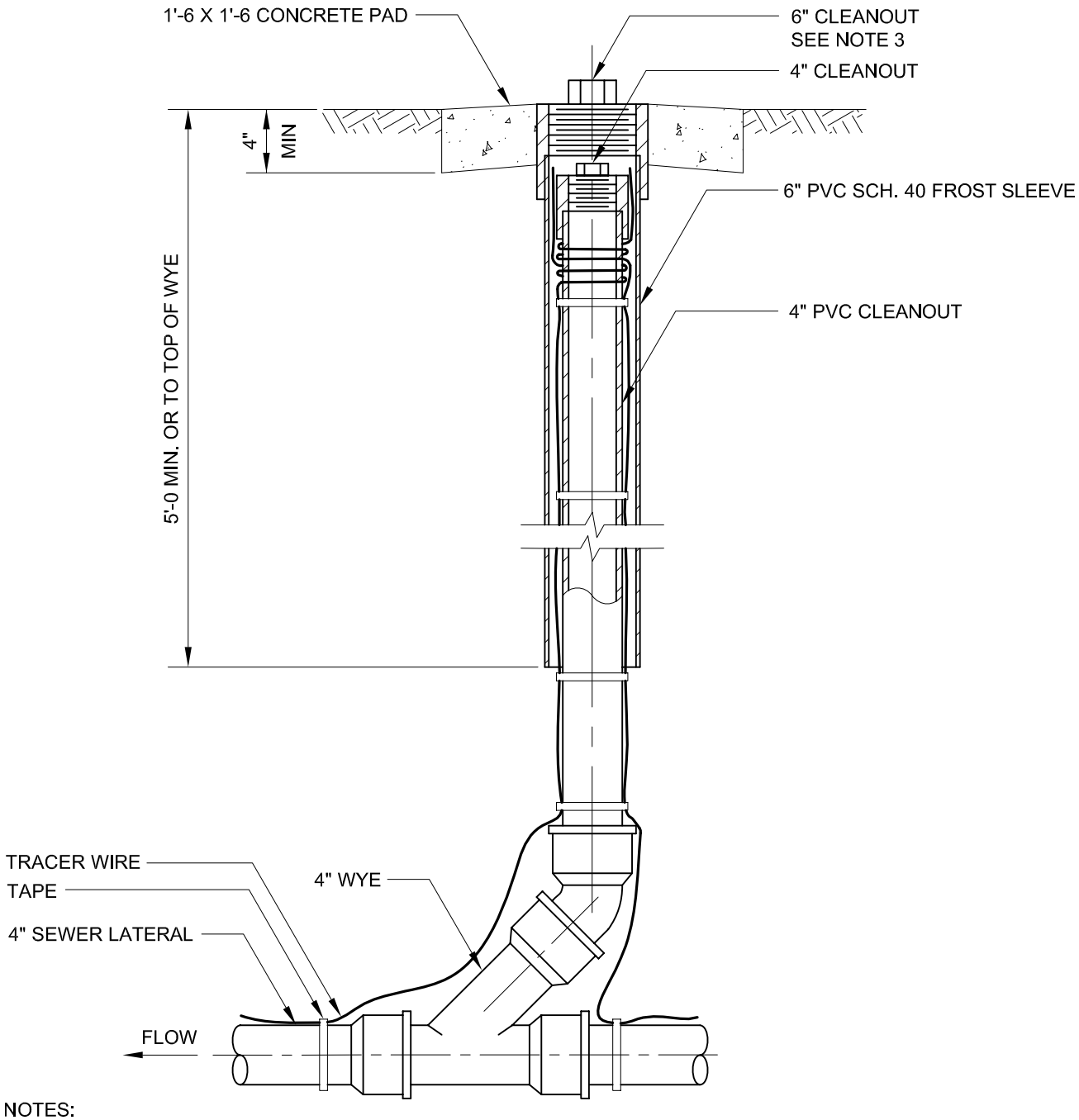

NOTES:

1. SEWER LATERAL CLEANOUTS SHALL BE PROVIDED ON LATERALS GREATER THAN 100 FEET IN LENGTH.
2. CLEANOUTS SHALL HAVE A MAXIMUM SPACING OF 100 FEET.
3. SEWER LATERAL CLEANOUTS THAT ARE LOCATED IN PAVED SURFACES SHALL HAVE A NEENAH R-1970 INSPECTION CASTING PROVIDED IN PLACE OF THE 6-INCH CLEANOUT PLUG. THE INSPECTION CASTING SHALL BE INSTALLED FLUSH WITH THE PAVED SURFACE.

PROJECT

STANDARD DETAILS FOR SANITARY SEWER CONSTRUCTION

TOWN OF SALEM
UTILITY DISTRICT
KENOSHA COUNTY, WISCONSIN

TITLE

SEWER LATERAL CLEANOUT

DRAWN	GD	JOB NO. E121-21.02	DETAIL NO.
CHECKED	CDK	DATE 2/28/08	S-17

J:\Salem\E121-21.02\S-17.dwg, 3/3/2008 2:17:40 PM, 1:1

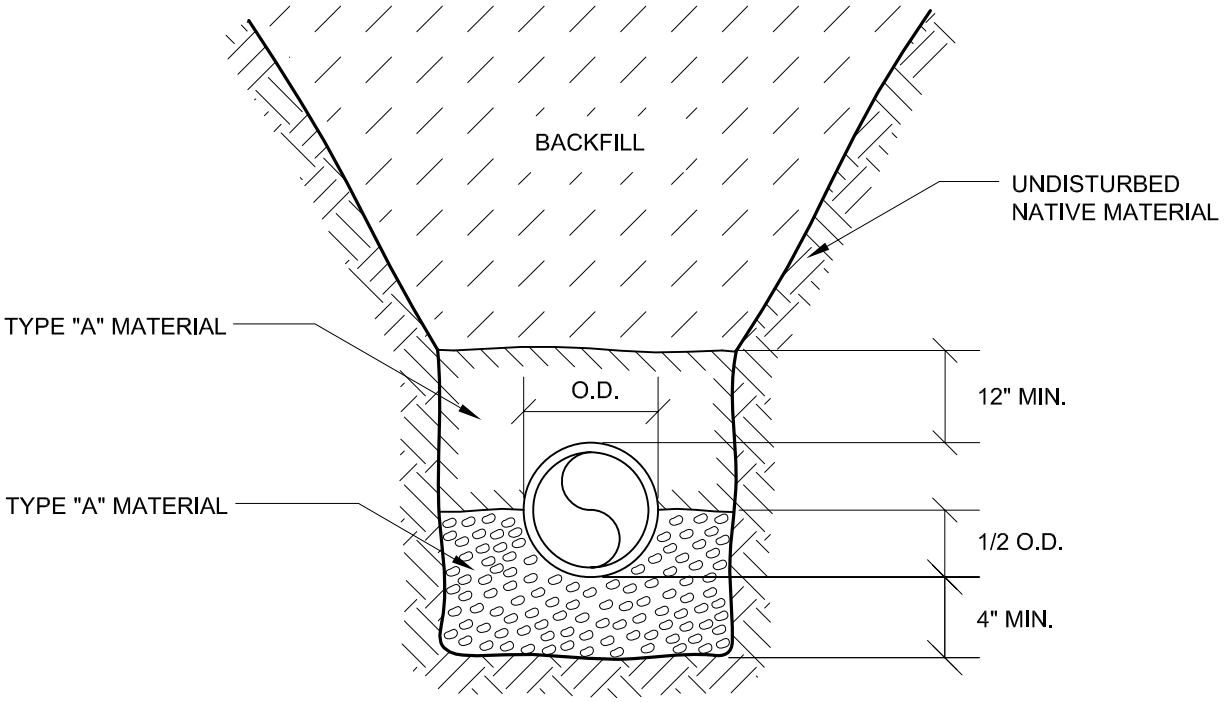

PROJECT

STANDARD DETAILS FOR SANITARY SEWER CONSTRUCTION

TOWN OF SALEM
UTILITY DISTRICT
KENOSHA COUNTY, WISCONSIN

TITLE

PRESSURE SEWER BEDDING

DRAWN	GD	JOB NO. E121-21.02	DETAIL NO.
CHECKED	CDK	DATE 2/28/08	S-18

J:\Salem\E121-21.02\S-18.dwg, 3/3/2008 2:18:13 PM, 1:1

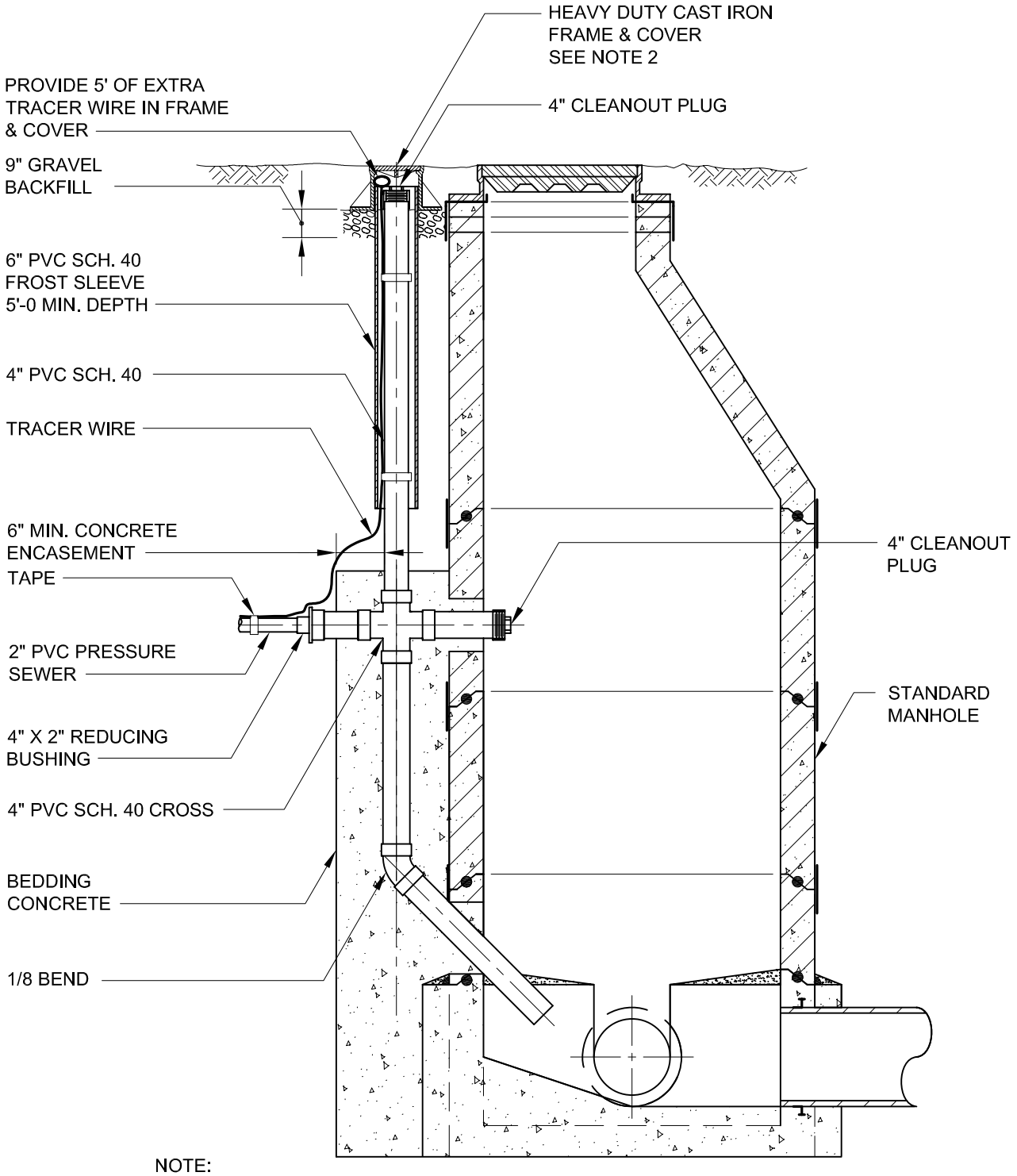

NOTE:

1. STEPS NOT SHOWN FOR CLARITY.
2. PROVIDE NEENAH R-1970 INSPECTION CASTING.

PROJECT STANDARD DETAILS FOR SANITARY SEWER CONSTRUCTION

TOWN OF SALEM
UTILITY DISTRICT
KENOSHA COUNTY, WISCONSIN

TITLE PRESSURE SEWER DISCHARGE MANHOLE CONNECTION

DRAWN	GD	JOB NO. E121-21.02	DETAIL NO.
CHECKED	CDK	DATE 2/28/08	S-19

J:\Salem\E121-21.02\S-19.dwg, 3/3/2008 2:18:41 PM, 1:1

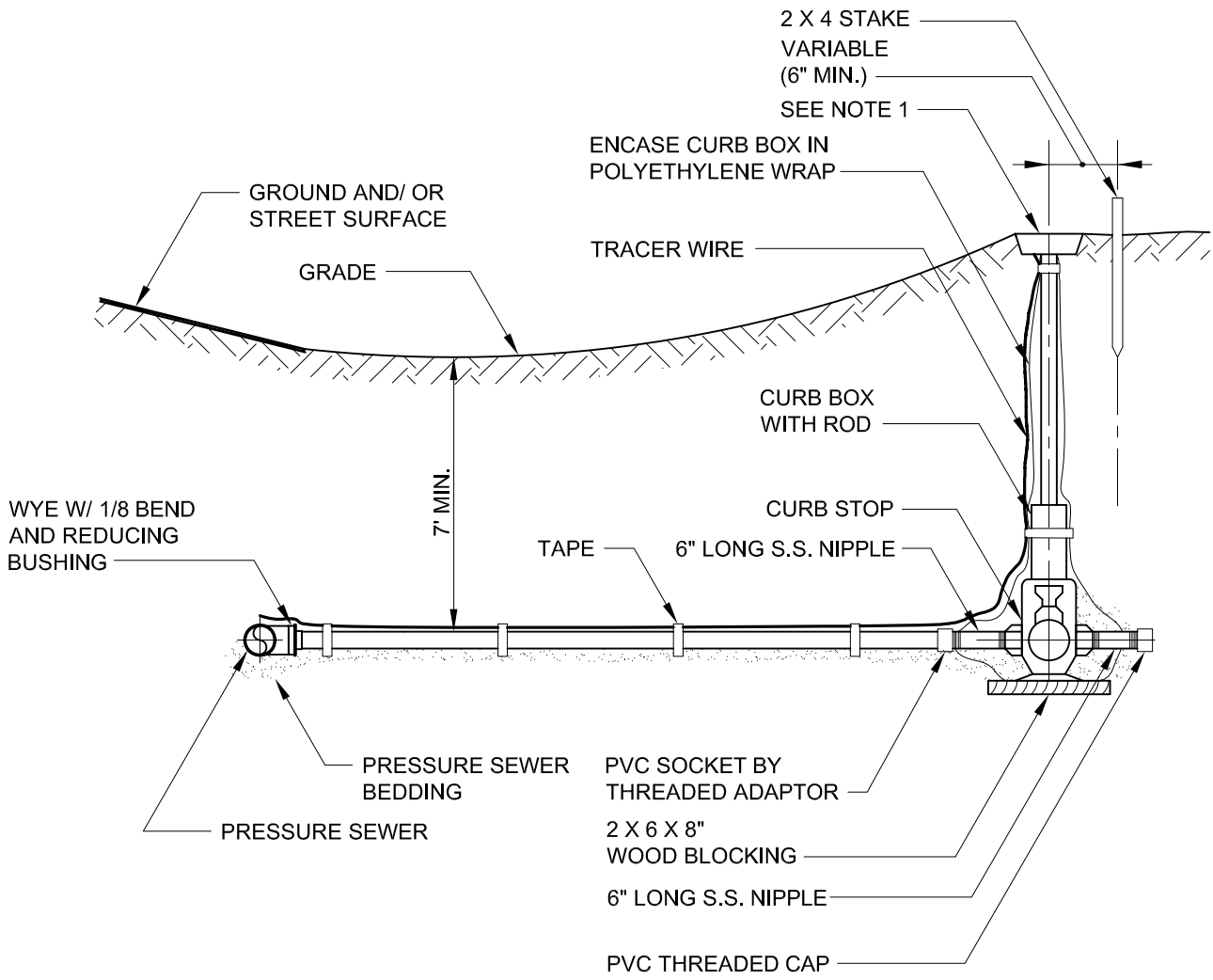

NOTE:

1. CURB BOXES LOCATED IN DRIVEWAYS OR WITHIN 5'-0" OF DRIVEWAYS SHALL BE PROVIDED WITH 4" MIN X 1'-6" X1'-6" CONCRETE PAD. THE CONCRETE PAD SHALL BE TO THE TOP OF THE CURB BOX.

PROJECT

STANDARD DETAILS FOR SANITARY SEWER CONSTRUCTION

TOWN OF SALEM
UTILITY DISTRICT
KENOSHA COUNTY, WISCONSIN

TITLE

PRESSURE SEWER LATERAL

DRAWN	GD	JOB NO. E121-21.02	DETAIL NO.
CHECKED	CDK	DATE 2/28/08	S-20

J:\Salem\E121-21.02\S-20.dwg, 3/3/2008 2:19:30 PM, 1:1

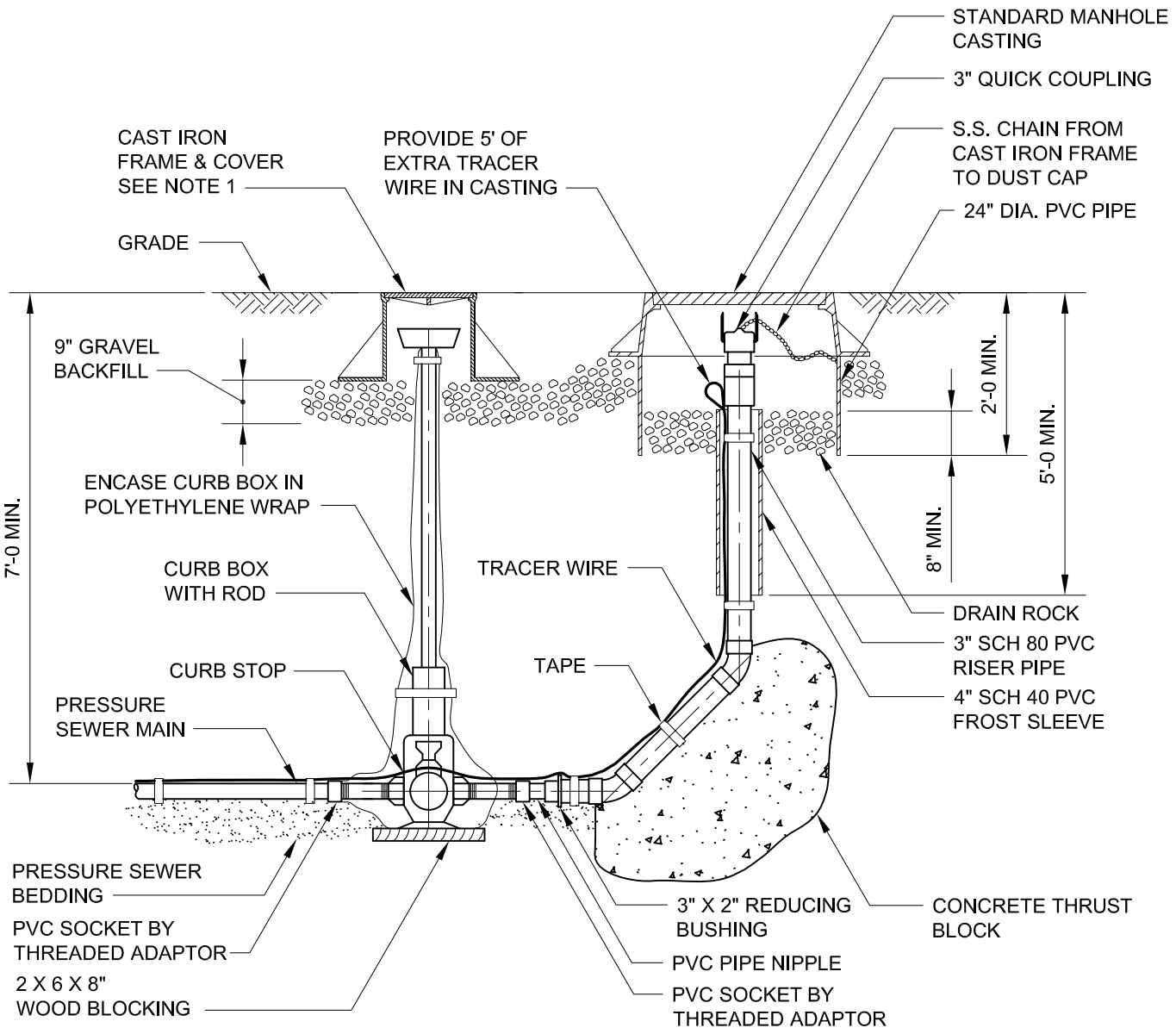

NOTE:

1. PROVIDE NEENAH R-1970 INSPECTION CASTING.

PROJECT STANDARD DETAILS FOR SANITARY SEWER CONSTRUCTION			
TOWN OF SALEM UTILITY DISTRICT KENOSHA COUNTY, WISCONSIN	TITLE PRESSURE SEWER FLUSHING CONNECTION		
	DRAWN GD	JOB NO. E121-21.02	DETAIL NO.
	CHECKED CDK	DATE 2/28/08	S-21

J:\Salem\E121-21.02\S-21.dwg, 3/3/2008 2:20:05 PM, 1:1

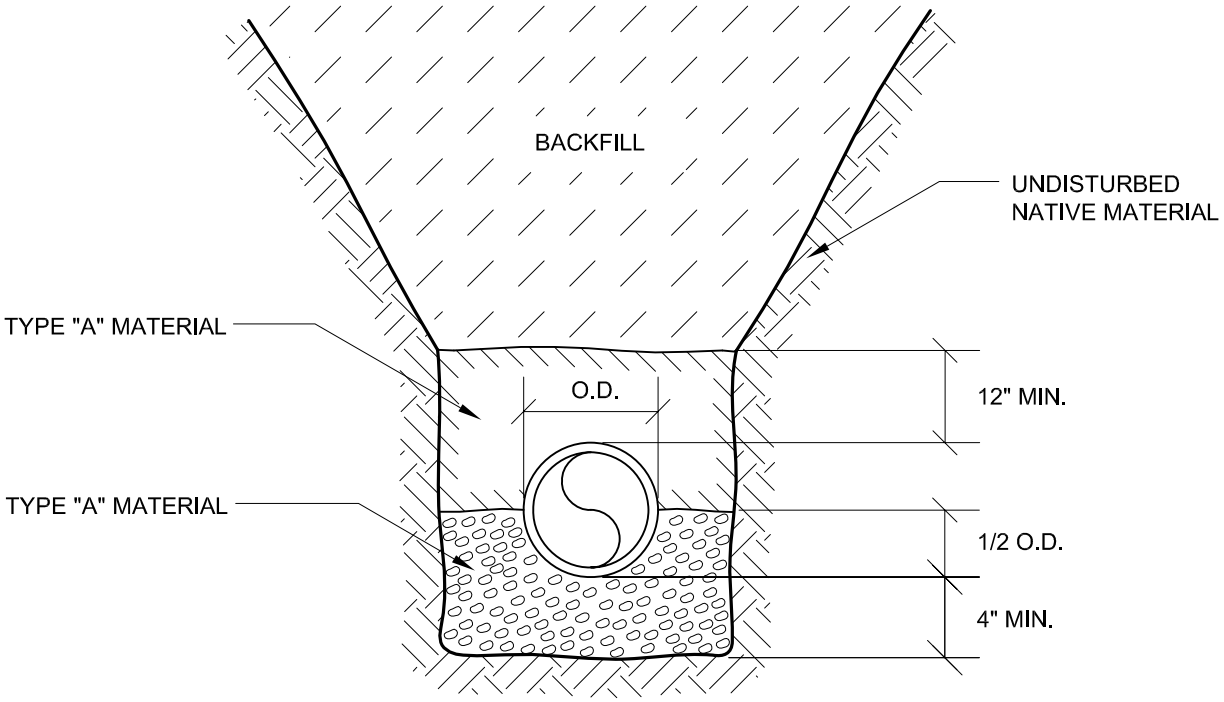

PROJECT

STANDARD DETAILS FOR WATER MAIN CONSTRUCTION

TOWN OF SALEM
UTILITY DISTRICT
KENOSHA COUNTY, WISCONSIN

TITLE

WATER MAIN BEDDING

DRAWN	GD	JOB NO. E132-07.02	DETAIL NO.
CHECKED	CDK	DATE 2/28/08	W-1

J:\Salem Town Of\E132-07.02\W-01.dwg, 3/3/2008 2:20:57 PM, 1:1

NOTES:

1. CONCRETE SHALL HAVE A MIN. COMPRESSIVE STRENGTH OF 2000 PSI & SHALL BE CAST AGAINST UNDISTURBED EARTH.
2. FITTINGS SHALL BE WRAPPED IN PLASTIC TO PREVENT CONCRETE BONDING TO FITTINGS.
3. FORM CONCRETE AS REQUIRED TO PREVENT CONTACT OR INTERFERENCE W/PIPE JOINTS.
4. THE LENGTH OF THE THRUST BLOCK SHALL BE APPROXIMATELY TWICE THE WIDTH. BEARING AREA = LENGTH X WIDTH.

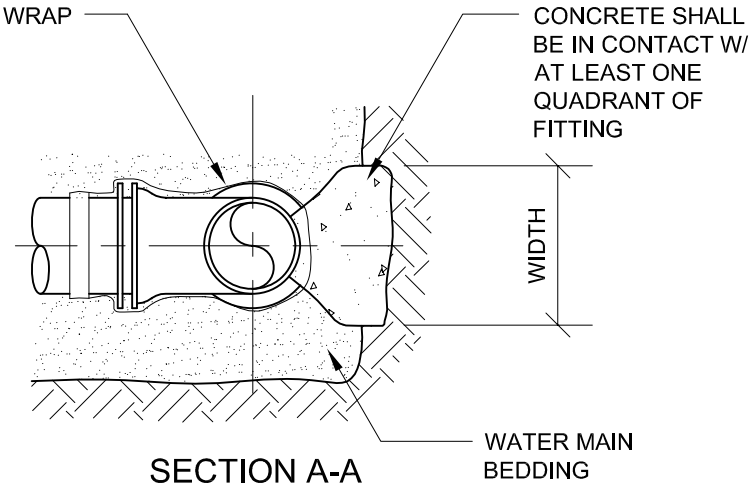

SECTION A-A

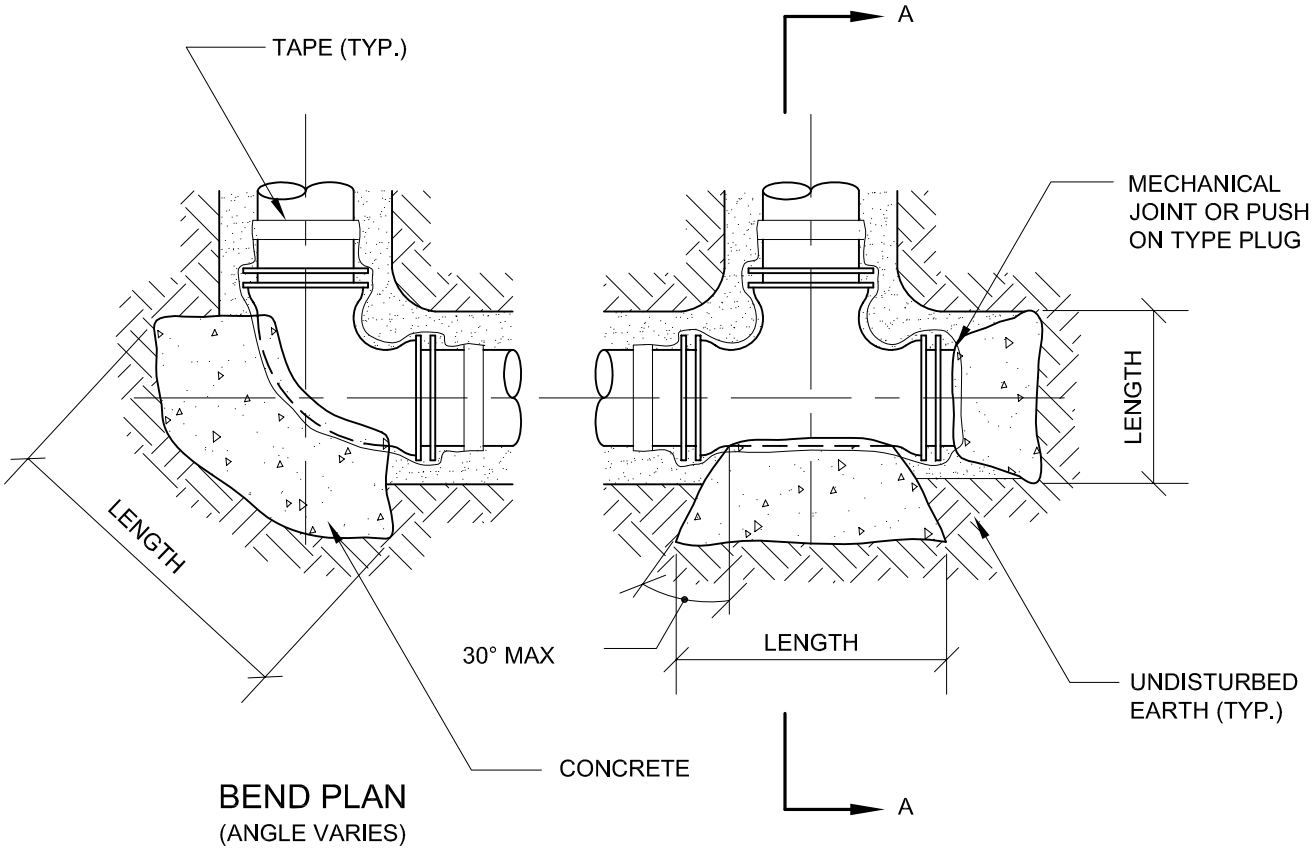

BEND PLAN
(ANGLE VARIES)

TEE PLAN

PROJECT STANDARD DETAILS FOR WATER MAIN CONSTRUCTION			
TOWN OF SALEM UTILITY DISTRICT KENOSHA COUNTY, WISCONSIN	TITLE THRUST BLOCKING		
	DRAWN GD	JOB NO. E132-07.02	DETAIL NO. W-2
	CHECKED CDK	DATE 2/28/08	

J:\Salem Town Of\E132-07.02\W-02.dwg, 3/3/2008 2:21:24 PM, 1:1

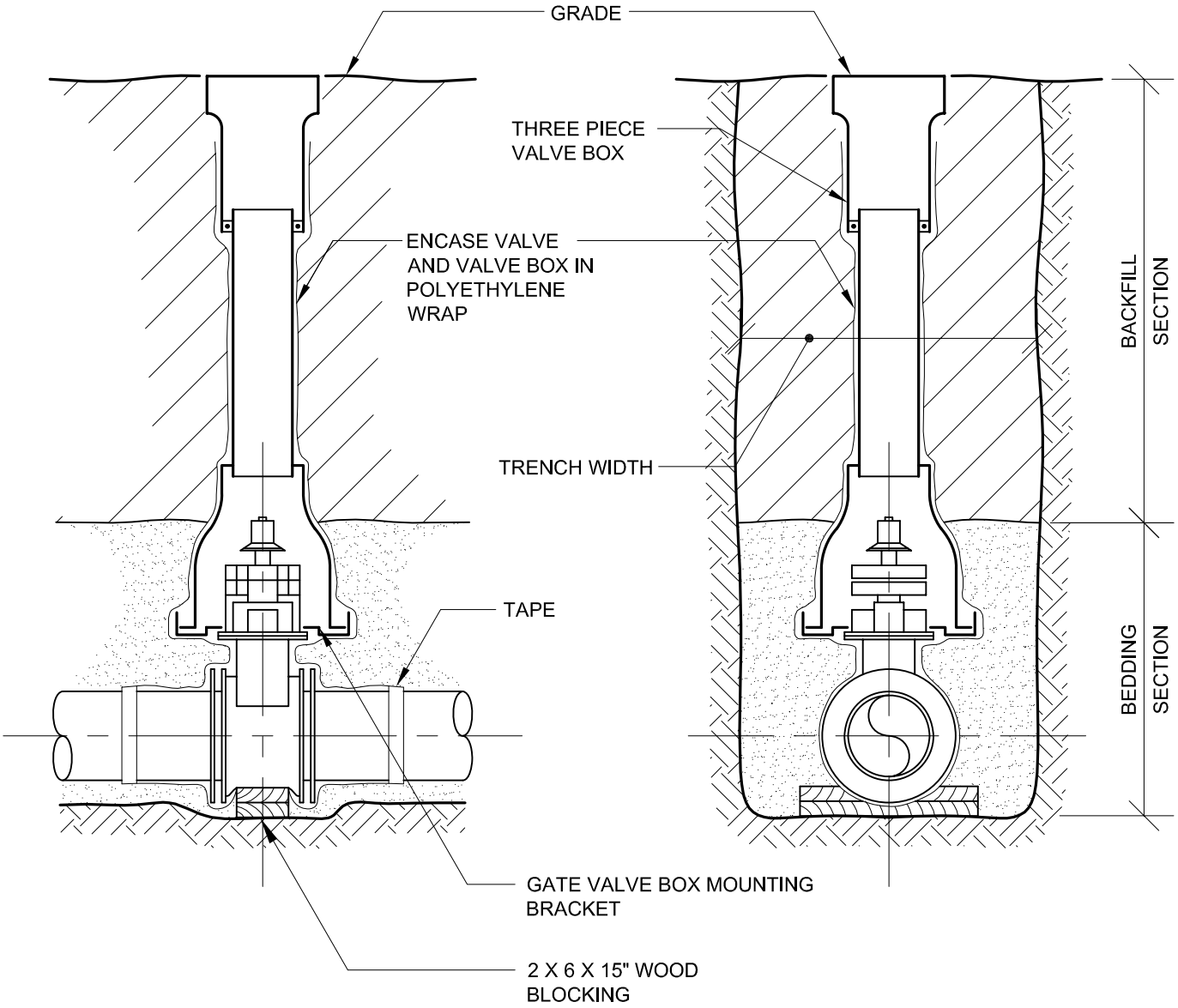

SIDE VIEW

FRONT VIEW

PROJECT STANDARD DETAILS FOR WATER MAIN CONSTRUCTION			
TOWN OF SALEM UTILITY DISTRICT KENOSHA COUNTY, WISCONSIN	TITLE RESILIENT SEATED GATE VALVE & BOX SETTING		
	DRAWN GD	JOB NO. E132-07.02	DETAIL NO. W-3
	CHECKED CDK	DATE 2/28/08	

J:\Salem Town Of\E132-07.02\W-03.dwg, 3/3/2008 2:21:56 PM, 1:1

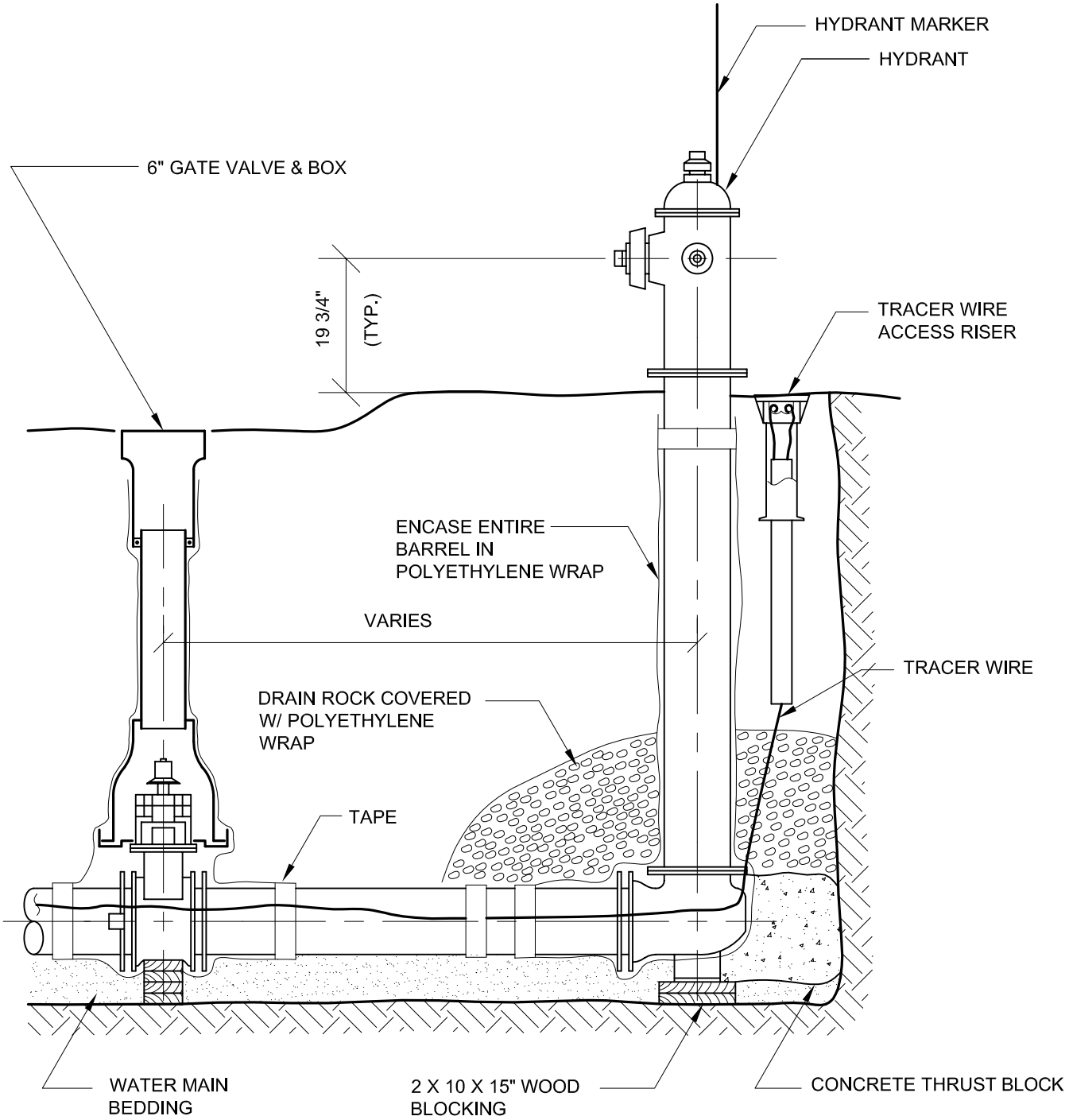

PROJECT

STANDARD DETAILS FOR WATER MAIN CONSTRUCTION

TOWN OF SALEM
UTILITY DISTRICT
KENOSHA COUNTY, WISCONSIN

TITLE

STANDARD FIRE HYDRANT

DRAWN	GD	JOB NO. E132-07.02	DETAIL NO.
CHECKED	CDK	DATE 2/28/08	W-4

J:\Salem Town Of\E132-07.02\W-04.dwg, 3/3/2008 2:22:29 PM, 1:1

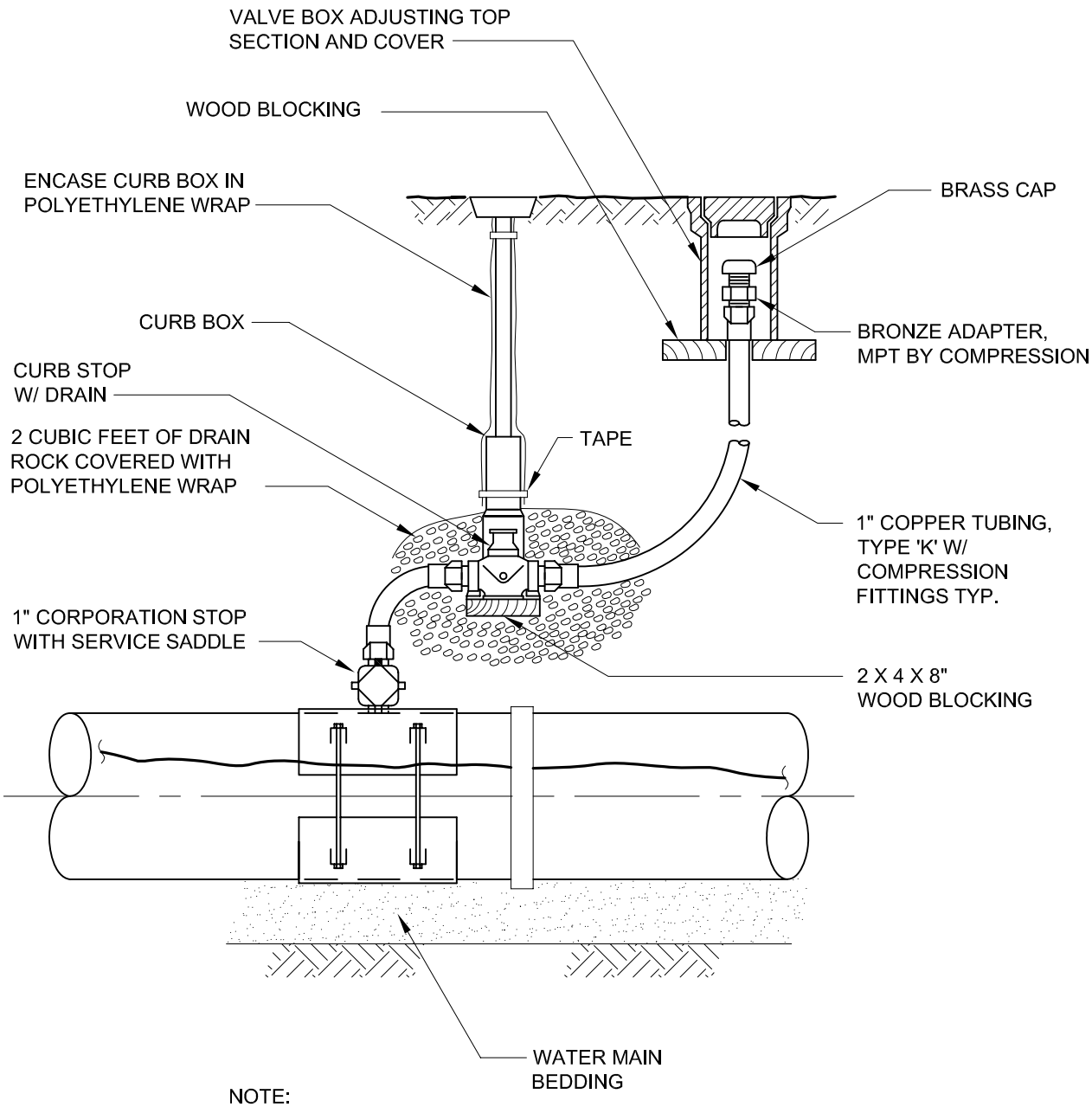

NOTE:

1. AN AIR RELEASE ASSEMBLY SHALL BE PROVIDED AT ALL HIGH POINTS EXCEPT WHEN A FIRE HYDRANT IS PROVIDED.

PROJECT STANDARD DETAILS FOR WATER MAIN CONSTRUCTION			
TOWN OF SALEM UTILITY DISTRICT KENOSHA COUNTY, WISCONSIN	TITLE AIR RELEASE ASSEMBLY		
	DRAWN GD	JOB NO. E132-07.02	DETAIL NO. W-5
	CHECKED CDK	DATE 2/28/08	

J:\Salem Town Of\E132-07.02\W-05.dwg, 3/3/2008 2:23:02 PM, 1:1

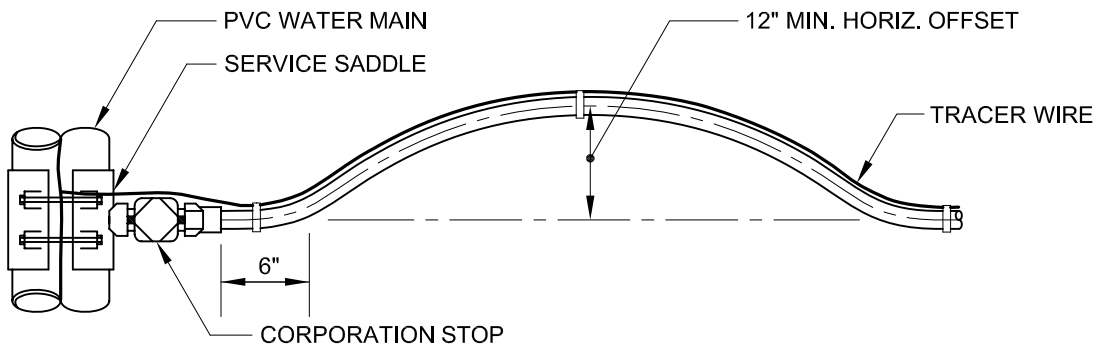

PLAN

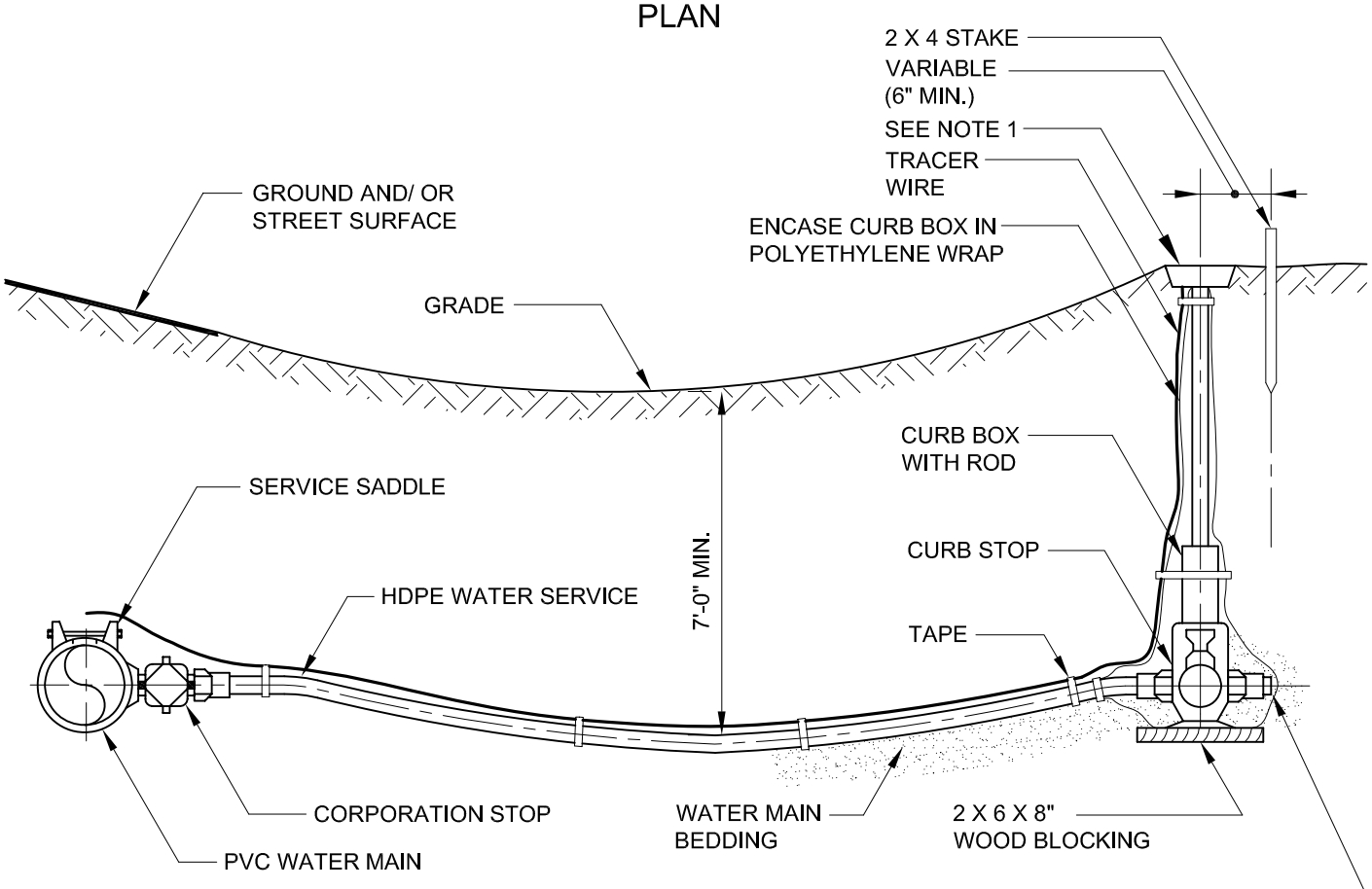

SECTION

NOTE:

1. CURB BOXES LOCATED IN DRIVEWAYS OR WITHIN 5'-0" OF DRIVEWAYS SHALL BE PROVIDED WITH 4" MIN X 1'-6" X1'-6" CONCRETE PAD. THE CONCRETE PAD SHALL BE TO THE TOP OF THE CURB BOX.

PROJECT STANDARD DETAILS FOR WATER MAIN CONSTRUCTION			
TOWN OF SALEM UTILITY DISTRICT KENOSHA COUNTY, WISCONSIN	TITLE WATER SERVICE		
	DRAWN GD	JOB NO. E132-07.02	DETAIL NO. W-6
	CHECKED CDK	DATE 2/28/08	

J:\Salem Town Of\E132-07.02\W-06.dwg, 3/3/2008 2:23:38 PM, 1:1